Operating and Installation Instructions (OII)
KTE/KCE Storage Tank System for Diesel, Heating Oil and Mineral Oil (Fresh and Waste Oil)

Krampitz® TANKSYSTEM GMBH

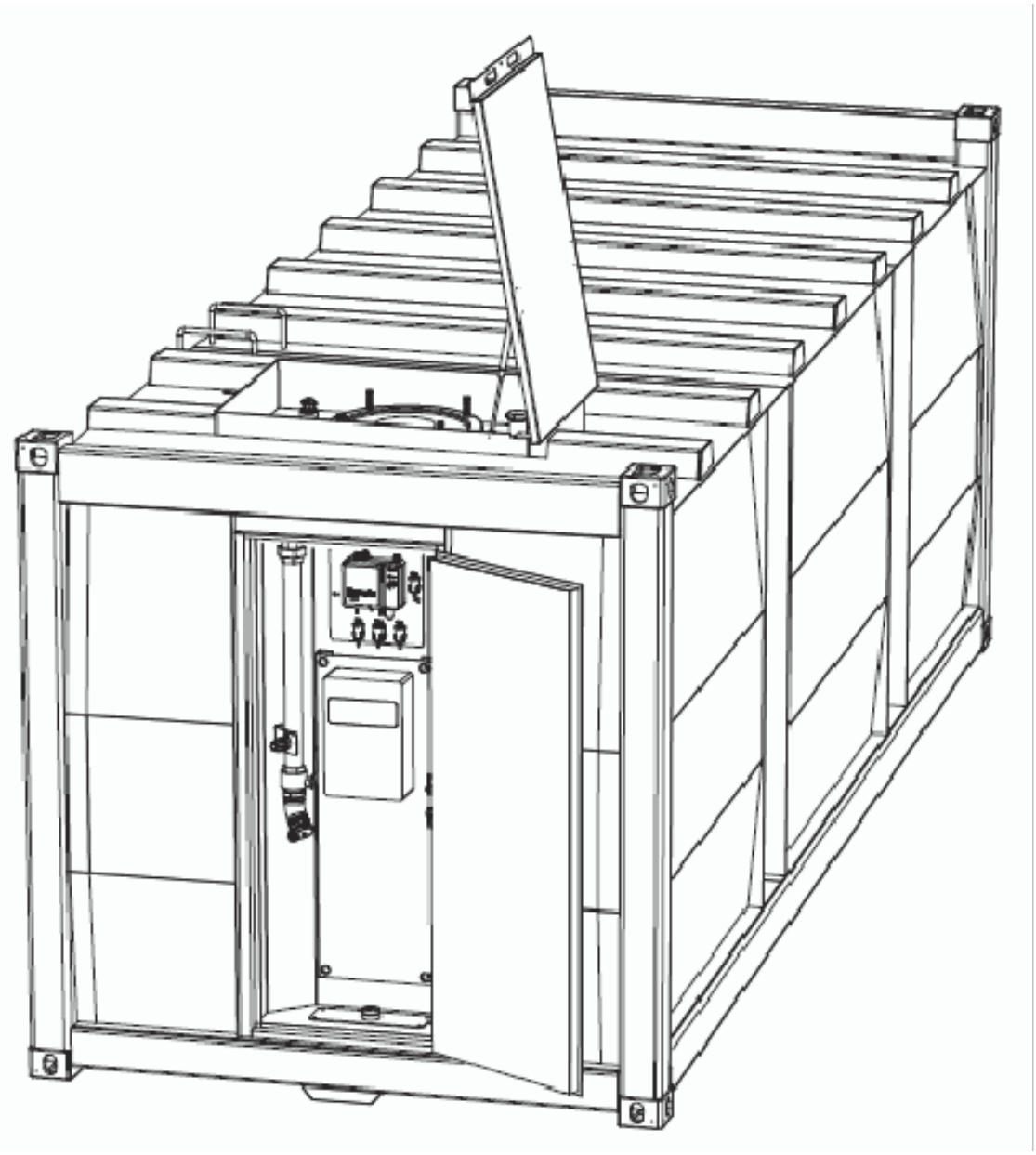

Type KTE/KCE: _____

Tank No.: _____

Year of Construction: _____

Issue 05/2010

CONTENTS

Setting the Limit Indicator for the Storage Tank KTE

KTE - storage tank

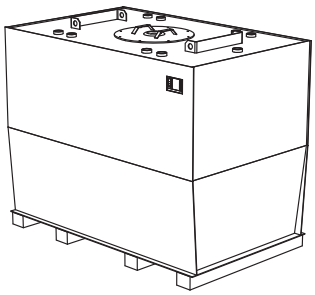

Detail

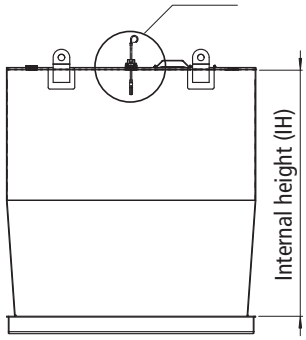

Limit indicator detail, setting measurements

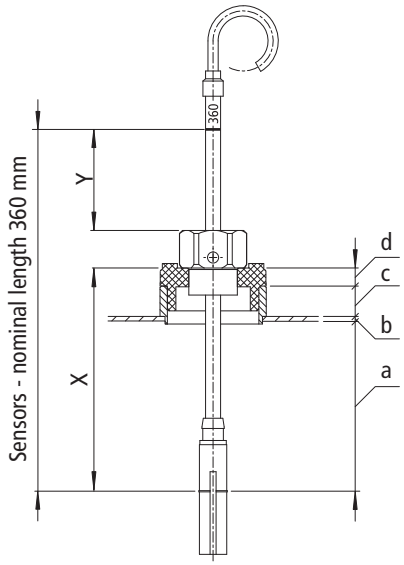

Type of tank	IH	b	X-GWG	Y
	mm	mm	**mm**	mm
KTE 950	1.484	4	**110**	225
KTE 1500	1.484	4	**110**	225
KTE 2000	1.484	4	**110**	225
KTE 2500	1.484	4	**110**	225
KTE 3000	1.484	4	**110**	225
KTE 4000	1.484	4	**110**	225
KTE 6000	1.498	4	**111**	224
KTE 9000	1.498	4	**111**	224
KTE 12000	1.993	4	**136**	199
from KTE 15000	1.993	4	**136**	199

X-GWG = a + b + c + d
Y = 360 - 25 - X-GWG
a = IH - (IH*0,95)

a - height between tank roof and limit indicator contact point
b - roof thickness, (see table)
c - sleeve height (20 mm)
d - reduction height (12 mm)

IH - Internal height
X-GWG - setting measurement for limit indicator
Y - monitoring (control) scale

Setting the Overfill Prevention Control for the Storage Tank KTE

KTE - storage tank

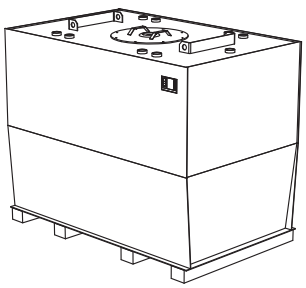

Detail

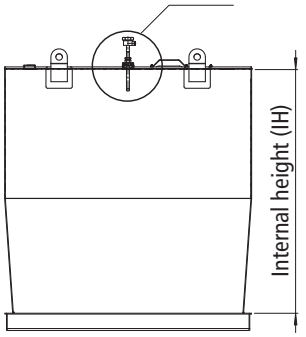

Overfill prevention control detail, setting measurements

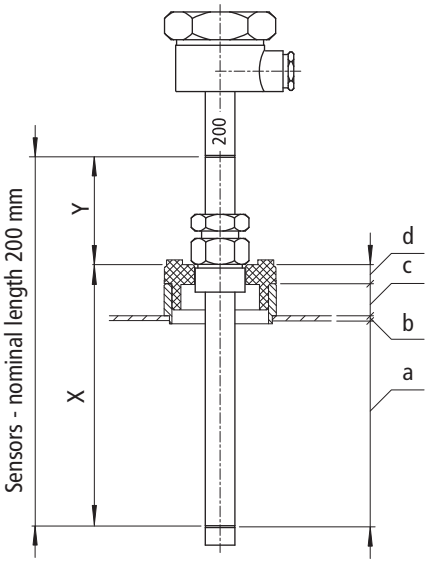

Type of tank	IH	b	X-ÜSI	Y
	mm	mm	**mm**	mm
KTE 950	1.484	4	**110**	90
KTE 1500	1.484	4	**110**	90
KTE 2000	1.484	4	**110**	90
KTE 2500	1.484	4	**110**	90
KTE 3000	1.484	4	**110**	90
KTE 4000	1.484	4	**110**	90
KTE 6000	1.498	4	**111**	89
KTE 9000	1.498	4	**111**	89
KTE 12000	1.993	4	**136**	64
from KTE 15000	1.993	4	**136**	64

X-ÜSI = a + b + c + d
Y = 200 - X-ÜSI
a = IH - (IH*0,95)

a - height between tank roof and overfill prevention control contact point
b - roof thickness, (see table)
c - sleeve height (20 mm)
d - reduction height (12 mm)

IH - Internal height
X-ÜSI - setting measurement for overfill prevention control
Y - monitoring (control) scale

Subject to technical changes!

PRELIMINARY REMARKS

- These technical operating and installation instructions (OII) describe the „KTE Storage Tank for Heating Oil, Diesel and Mineral Oil". They give descriptions and instructions required by the operator to ensure correct operation, proper material maintenance and compliance with safety and occupational health and safety regulations.
- Tank system designation: The KTE storage tank for heating oil, diesel and mineral oil is hereafter referred to as KTE for reasons of simplicity.
- The table of contents provides an outline of the OII and gives the chapters and sub-sections including page numbers.
- Important instructions regarding technical safety and occupational health and safety are highlighted using the pictograms below.

CAUTION Operating procedures which must be strictly respected to avoid bodily injuries.

ATTENTION Operating procedures which must be strictly respected to avoid damages to or destruction of the system.

NOTE Technical requirements which must be particularly respected by the operator.

LIST OF ABBREVIATIONS

KTE - single-wall compact tank
WHG - Federal German Water Act
TRbF - German technical guidelines for flammable liquids
OII - operating and installation instructions

1. SAFETY GUIDELINES AND REGULATIONS

1.1 Safety Quidelines

CAUTION Maintenance and repair work on overfill prevention control and leakage warning devices may be carried out by authorised specialists only in accordance with § 19 l WHG.

CAUTION After connecting up the electronic components to the mains source, the installation will conduct potentially fatal electric voltages. Before commencing work on the electrical components, the main power cable connection must be disconnected.

CAUTION The tank may be only be entered via the opening provided for that purpose. The container must be completely emptied, cleaned and degassed. The person entering the tank must wear the appropriate protective equipment - in accordance with the requirements of the Law on Work and Health Protection.

WARNING No work such as drilling, welding, burning or grinding may be performed on the body of the tank, as it is enclosed by metal sheeting.

WARNING Operating errors or disregarding the information in the OAI, as well as the health and working safety provisions guidelines will lead to damage to the installation and the environment, harm to people, as well as to the expiry of the warranty claims.

WARNING Due to its single-walled design the KTE must be installed for the storage of water polluting media in an approved collecting pan

The KTE and its accessory and equipment parts must be maintained on a regular basis after they were taken into operation for the first time.

1.2 Operating Regulations

1.2.1 General operating regulations

Initial commissioning
Prior to the initial commissioning, the KTE plus any needed equipment must be checked for any visible damage.

Operational readiness
The installation must be continuously monitored, in order that any malfunctioning in the course of operation can be determined as early as possible, thus avoiding any further damage. Monitoring and correcting of malfunctions or faults must be undertaken by suitably qualified and trained personnel.

Temporary taking out of service
For a temporary taking out of service, the power supply to the KTE must be disconnected.

Restarting the installation
To restart the installation, the KTE must be checked to be working properly.
The following components must be checked:
- the electrical connections,
- the container and supply pipes for leak tightness.

1.2.2 Conduct regulations

1. The operator is obliged to maintain the KTE in proper working order, carry out any necessary repair work without delay and take any required safety measures according to the circumstances.
2. In the event of the operator being unable to determine the condition of the installation or effect the repairs, he must either seek advice from a qualified expert or conclude a maintenance contract with an approved qualified company.
3. The installation must not be used while in a defective condition, which could cause a hazard or danger.
4. Measures to eliminate or lessen any dangerous situations are to be immediately undertaken.
5. The prescribed safety installations are to be used.
6. The safety installations must be operated and maintained in such a way, that their function and effectiveness remain unimpaired.
7. Safety installations must especially not be by-passed or completely or even partially rendered inoperative.
8. Only approved water hazardous, non-inflammable liquids may be stored in the KTE. The approved liquids are indicated on the identification plate.
9. Filling the KTE must be carried out in such a way, that overfilling is avoided. Before filling, the level of the liquid in the tank interior must be checked. The amount of liquid required to fill the KTE must be determined.
10. The KTE filling and emptying processes using a tanker or drum must be constantly controlled by the operator.

1.2.3 Training the operating personnel

Operating personnel must familiarise themselves with both the use of the KTE and the contents of the operating instructions. They must be formally instructed in relation to the dangers of spills or leaks associated with storing and filling water hazardous liquids, as well as measures to avert such - before the initial operation, and subsequently in appropriate intervals, but at least once a year.

1.2.4 Repair and maintenance

During maintenance works, the KTE must neither be filled nor emptied.
Before repair work on the electrical system, make sure the entire system is dead (zero potential).

1.2.5 Technical safety inspections

Name of inspecting authority	Inspected by	Date	Inspection certificate
Visual inspection of tank	User	weekly	report
Visual inspection for tightness of connections to tank	User	weekly	report
Interior inspection of tank container – for volumes from 10,000 litres upwards	Qualified expert	every 5 years	Certification
Inspection of safety components (catch sump)**	User	Yearly	Certification
Functional testing of limit indicator**	For specialist use in accordance with § 19 l WHG	Yearly	Certification
Functional testing of overfill protection control**	For specialist use in accordance with § 19 l WHG	Yearly	Certification
Functional testing of liquid level gauge**	Elektro-Betrieb oder eingewiesenes Personal	Yearly	Certification

* Following instruction from manufacturer ** Special equipment (if appropriate)

1.2.6 Handling diesel, heating and mineral oil

When handling diesel, heating and mineral oil, the generally applicable safety regulations as well as the particular operating instructions of the individual owner / user are to be followed.

2. DESCRIPTION

2.1 Graphical Representation of the KTE Tank Fittings

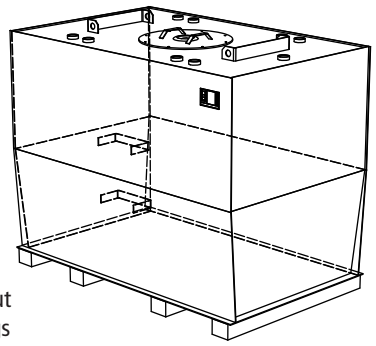

KTE without tank fittings

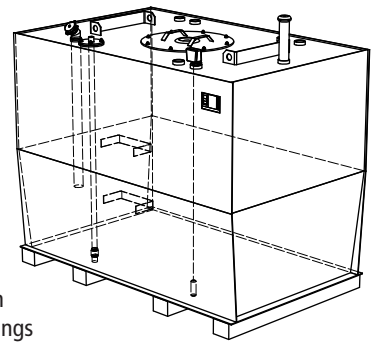

KTE with tank fittings

Tank fittings

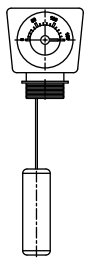

Mechanical level indicator

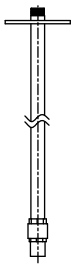

Suction pipe with flanged foot valve

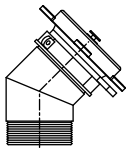

Filler neck

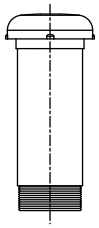

Vent cap with pipe socket

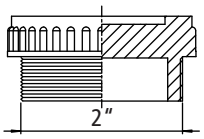

Blind plug 2″

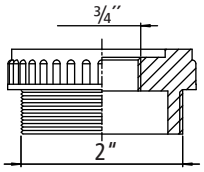

Adapter 2″ x ¾″

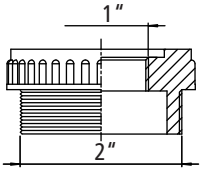

Adapter 2″ x 1″

2.2 Purpose of the KTE

he function of the KTE is to store non-inflammable, water hazardous liquids, such as heating oil, diesel or mineral oil (new and old oil). The KTE is designated a storage tank. The cubic-shaped design guarantees the optimum utilisation of space.
The KTE is suitable both for indoor and outdoor operation. The installation area must be level and stable. It may only be set up in areas where additional hazards or requirements do not exist. For operation under special conditions (e.g. in a water conservation area, ex-zone, with non-inflammable liquids) the appropriate applicable regulations are to be followed.
The KTE is normally manufactured according to the general Building Supervisory Approval no. Z-38.11-143.

WARNING The KTE may only be transported in an emptied and clean condition.

2.3 Technical Data of the KTE

2.3.1 Views and Connections of the KTE

The KTE is manufactured in 15 standard sizes. Special dimensions regarding length, width and height can be realised on request. Transportability is the only limit.

Connections of the KTE

1 manhole DN 600
2 connecting sleeve 2″
3 pressure relief device

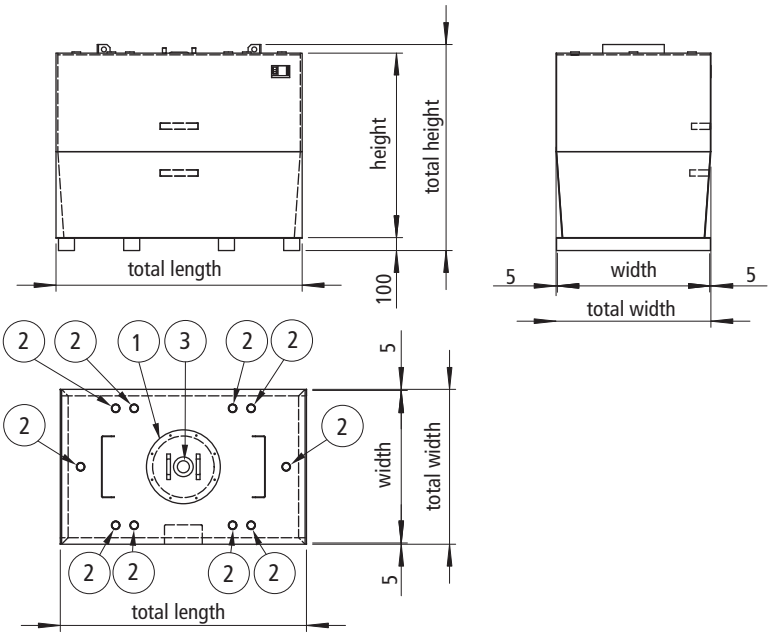

The KTE is equipped with the connections below:
Ten 2´´ connecting sleeves on the roof for the optional installation of level sensors, overfill protection, system flow and return, filling by pump, filling by tank lorry and ventilation.
A dome cover DN 600 with integrated NBR pressure relief is located in the centre of the tank roof. It serves as a safety device which relieves in case of overpressure. When disassembling the device, the opening can be used as a hand hole and inspection opening. When the dome cover is removed, the opening is used as a manhole for internal inspection and for cleaning the tank. The capacity of the individual tank types can be found in the table below. The number included in the tank type name provides a reference value and indicates the type.

2.3.2 Dimensions and Volume of the KTE

Tank type	Volume 100%	Volume 95%	Length	Width	Total width	Height	Total height	Weight
Art.-no.	Litres	Litres	mm	mm	mm	mm	mm	kg
KTE 950	1,000	970	1,000	750	760	1,500	1,700	280
KTE 1,500	1,550	1,450	1,500	750	760	1,500	1,700	360
KTE 2,000	2,050	1,950	1,500	1,000	1,010	1,500	1,700	430
KTE 2,500	2,800	2,650	2,000	1,000	1,010	1,500	1,700	530
KTE 3,000	3,550	3,350	2,000	1,250	1,260	1,500	1,700	620
KTE 4,000	4,250	4,000	2,000	1,500	1,510	1,500	1,700	680
KTE 6,000	6,200	5,900	3,000	1,500	1,530	1,500	1,750	970
KTE 9,000	9,500	9,000	3,400	2,000	2,030	1,500	1,750	1,270
KTE 12,000	12,700	12,000	3,500	2,000	2,030	2,000	2,250	1,730
KTE 15,000	14,500	13,700	4,000	2,000	2,030	2,000	2,250	1,920
KTE 20,000	20,000	18,900	5,500	2,000	2,030	2,000	2,250	2,720
KTE 25,000	25,440	24,120	7,000	2,000	2,030	2,000	2,250	3,100
KTE 30,000	28,940	27,440	8,000	2,000	2,030	2,000	2,250	3,600
KTE 40,000	46,000	43,690	10,500	2,400	2,430	2,000	2,250	4,900
KTE 50,000	52,600	49,920	12,000	2,400	2,430	2,000	2,250	5,600

NOTE The maximum filling volume is 95 percent of the container height according to the building authority permit Z-38.11-143.

2.3.3 KTE Filling and Suction Rate When Filled by Tank Lorry

KTE type	Filling rate	Suction rate
KTE 950	150 litres/min – only with petrol pump nozzle	600 litres/min
from KTE 1,500	600 litres/min – with tank lorry hose	600 litres/min

The storage tank is filled using the tank lorry connection. Tanks with a capacity of up to 1,000 litres can also be filled with a petrol pump nozzle with a dead man's switch.

2.3.4 System Schematic

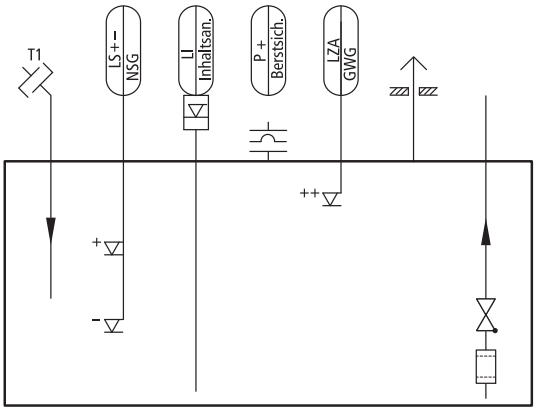

standard container with tank fittings
container with standard equipment and
special accessories ready for operation

KTE - single-wall storage tank

Legend - designations in accordance with DIN 19227

- P + Berstsich. — Overpressure relief bursting disc
- LI Inhaltsan. — Local level indicator mechanical level indicator
- LS + – NSG — Float switch
- LZA GWG — Overfill safety limit indicator - type approved

Legend symbols in accordance with DIN 2481

- T1 — Tanker connection filling
- Bursting disc (overpressure)
- Foot valve
- Filter / dirt trap
- Liquid level gauge
- Ventilation to outside
- Information on conveying direction
- ++ + – – — Level indicator, switch contacts for upper and lower limit levels
- Container one-walled
- Catch summp

2.4. Components of the KTE - Standard Equipment

2.4.1 The Tank Container

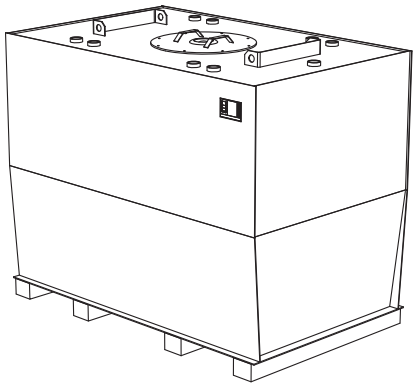

The single-walled, cubic design is characteristic for the tank container. It allows for high safety and effective use of space. The KTE tank container is normally made of steel (S235 JRG2). On the outside, the tank container is coated with a 2-component lacquer finish (RAL 7032) to protect it from corrosion. The inside wall is untreated and oiled.

NOTE If desired, the manufacturer can apply an internal coating before delivery to the owner to protect the inside wall from corrosion.

2.4.2 The Filling Pipe (Installed)

The filling pipe DN 50 is located inside the KTE.
It is attached to the tank roof via a 2˝ sleeve. This sleeve also serves to install the filler neck (see 2.5.3).
The filling pipe prevents swirling of the fluid when the tank is filled and when the fluid flows directly through the filler neck on the tank roof into the container.

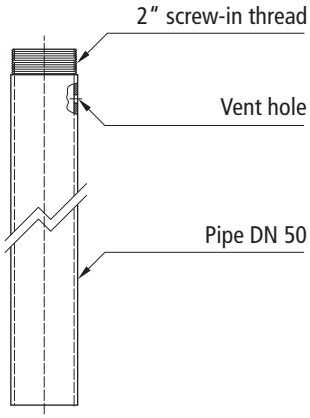

2.4.3 The Manhole (Installed)

The manhole DN 500 is located in the centre of the tank roof.
The opening serves as a manhole for internal inspection and for cleaning the tank container. The pressure relief device is located in the centre of the manhole. Tanks with a volume less than 2,000 litres have instead of the manhole a inspection and cleaning opening from DN 500 or rather DN 600.

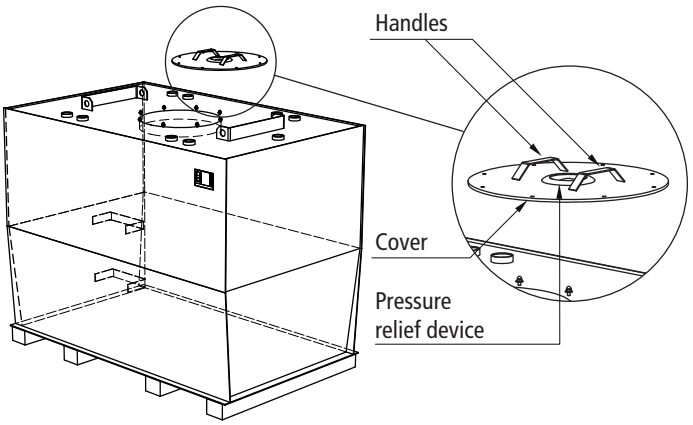

2.4.4 Transport Stoppers (Installed) (AM-948)

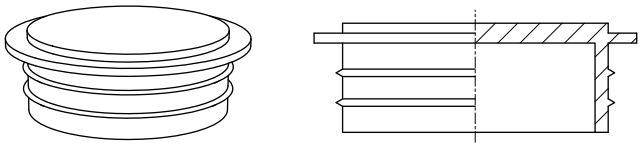

There are plastic transport stoppers in all sleeves of the tank container. They serve as corrosion protectors during transport. Before installing the fittings, taking the KTE into operation or any of its fittings, all transport stoppers must be removed. Unused sleeves must be closed using blind plugs (see 2.5.5).

2.4.5 The Pressure Relief Device (Installed) (AM-595)

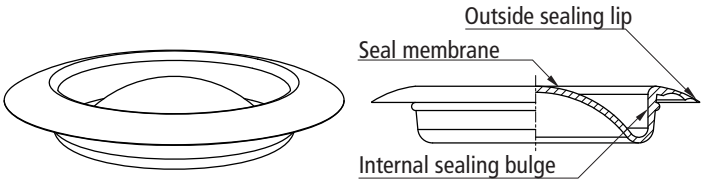

The pressure relief device is installed in the centre of the manhole on the tank roof. In the event of a sudden excess pressure, it opens to avoid that the tank bursts. The opening for the pressure relief device serves at the same time as a hand hole and inspection opening. The burst disk is made of oil-resistant material (NBR).

2.4.6 The Steps and Feet (Installed)

To facilitate inspections, there are steps on the inside wall of the KTE.
Tanks higher than 2000 mm are also equipped with steps on the outside wall of the KTE for climbing the roof.
The KTE is equipped with feet (height 100 mm). These prevent reliably the formation of condensation water on the outer tank bottom. They also ensure good visibility and transportability by industrial trucks.

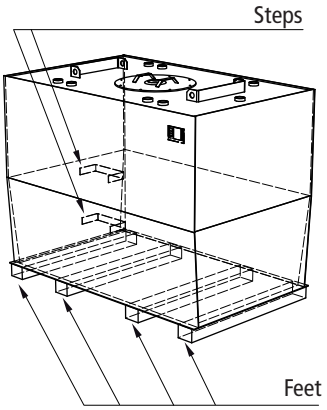

Application Sample KTE 3,000

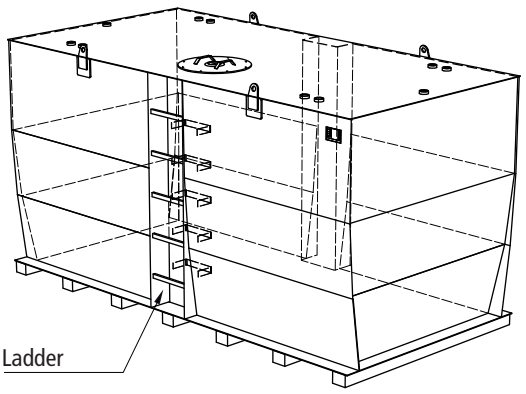

Application Sample KTE 15,000

2.4.7 Corrosion Protection When Placed Inside

Every KTE storage tank is normally coated with a 2-component textured lacquer. The standard colour of Krampitz Tanksystem GmbH for this series is RAL 7032 (pebble grey). Further RAL colours are available upon request for an extra charge. The inside of the tank is untreated and a thin oily protective film protects it from corrosion.

2.4.8 The Manufacturer's Plate

Every KTE storage tank carries a manufacturer's plate in compliance with building authority permit Z-38.11-143. On the right-hand side of the manufacturer's plate, the logo of the manufacturer, Krampitz Tanksystem GmbH, is attached. In the centre of the plate, all relevant data regarding the tank can be found (serial number, year of manufacture, test pressure, capacity, material, etc.). On the left-hand side, the mark of conformity with the EC directive for containers (short: CE mark) is affixed. The manufacturer's name, the building authority permit number and the organisation observing the manufacturer are also listed again. The manufacturer's plate is fixed on the long side of the tank. After successful inspection, the manufacturer's plate receives the inspector's mark according to DIN 6600 (bottom right).

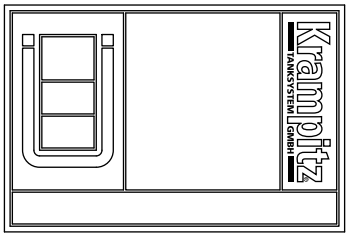

2.5. KTE Components - Special Equipment

2.5.1 The Suction Pipe - System Flow (AM-920)

The suction pipe is installed on the roof using a flange. After successful installation of the suction pipe including the foot valve, it is connected with the system flow.

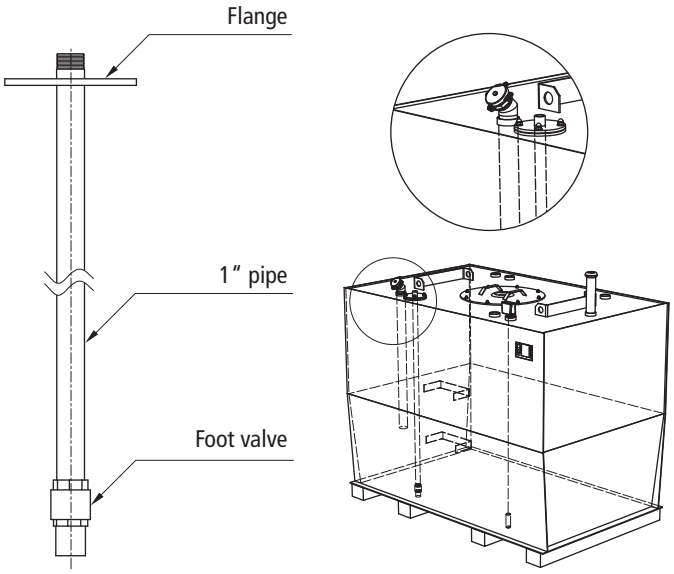

2.5.2 The System Return (AM-912)

The system return can be easily installed using one of the 2´´ sleeves on the roof via a 2´´ x ¾´´ connection adapter.

2.5.3 The Filler Neck with Filling pipe plug (AM-912)

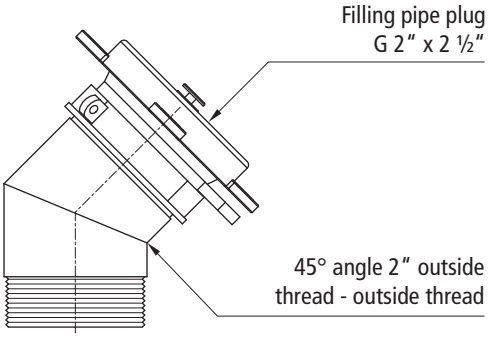

Every KTE must be equipped with a filling connection (see also TRbF 20). The 2´´ x 2 ½´´ tank lorry connection is installed using a 2´´/45° angle in a 2´´ sleeve on the tank roof. In the event that the connection is displaced from the system on-site, the connection can also be installed outside on a wall.

2.5.4 The Vent Connection with Cap (AM-911)

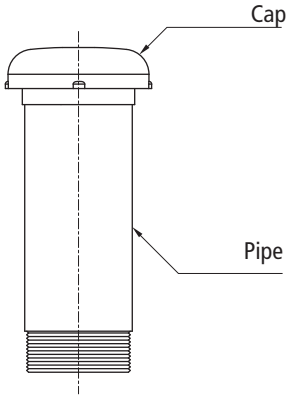

The 2´´ vent pipe is installed on the tank roof using a 2´´ connecting sleeve. If the tank is filled through the tank lorry connection by a road tank vehicle, the vent pipe must be as high above the tank roof as the filling connection used by road vehicles.
For tanks placed below the ground level (for example in the cellar), the vent connection must be installed at least 500 mm above the connection for the filling by road tank vehicles and at least 500 mm above the ground level. The vent connection must not end in closed rooms.
Exception: individual surface tanks for diesel and heating oil smaller than 1,000 litres (see TRbF 20).

2.5.5 The Adapter Set

The adaptor set ensures the connection of socket fittings. The adaptors are not suitable for connecting pipes.

The adaptor set consists of:

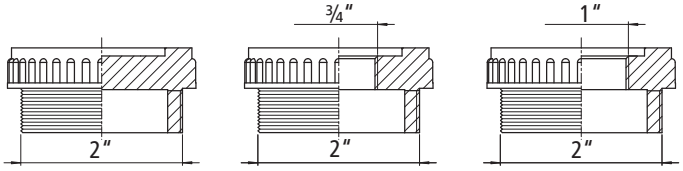

AM-099-81
4x blind plug
outside thread 2"

AM-960-22P
2x reduction outside
thread 2" x inside
thread ¾"

AM-960-21P
2x reduction outside
thread 2" x inside
thread 1"

The 2´´ sealing plug and reduction are made of High Density Polyethylene (PE-HD). A sealing ring is used to seal the plug. Simply screw the plug tightly into the appropriate 2´´sleeve on the tank roof by hand. The knurled outside edge of the plug makes it very easy to grasp and turn.

2.5.6 The Mechanical Level Indicator (AM-001)

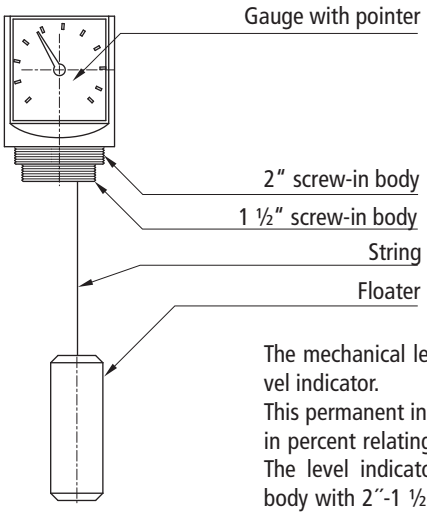

The mechanical level indicator is a float level indicator.
This permanent indicator shows the volume in percent relating to the total tank height. The level indicator consists of a screw-in body with 2´´-1 ½´´ double thread. The floater can be easily lowered into the tank using one of the 2´´ sleeves on the tank roof. Also use the sleeve to fasten the screw-in body.
The mechanical level indicator is suitable for KTEs of heights ranging from 900 to 2,000 mm.

2.5.7 The Fuel Dip Stick (AM-006)

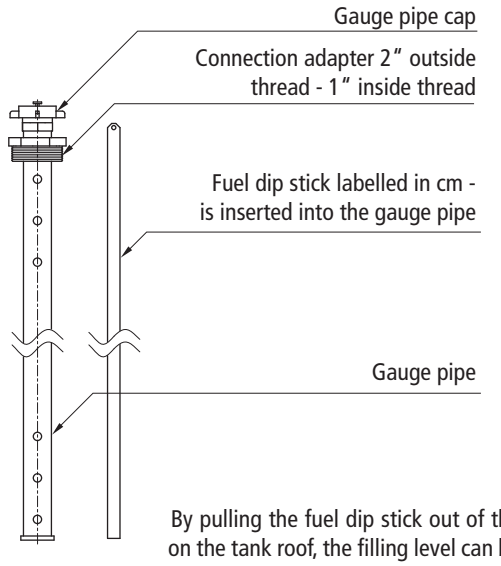

By pulling the fuel dip stick out of the gauge pipe on the tank roof, the filling level can be determined based on the wetting level of the stick.
In order to allow for an accurate reading, the dip stick is labelled in cm.

2.5.8 Bearing charts

2.5.8.1 Bearing charts for KTE 950, KTE 1500

Bearing charts - KTE 950

Level mm	Content Liter	Level %	Level mm	Content Liter	Level %	Level mm	Content Liter	Level %
10	6	0,7%	510	318	34,3%	1.010	678	68,0%
20	11	1,3%	520	325	35,0%	1.020	685	68,7%
30	17	2,0%	530	332	35,7%	1.030	692	69,4%
40	23	2,7%	540	339	36,4%	1.040	700	70,0%
50	29	3,3%	550	346	37,0%	1.050	707	70,7%
60	34	4,0%	560	353	37,7%	1.060	714	71,4%
70	40	4,7%	570	360	38,4%	1.070	721	72,1%
80	46	5,3%	580	367	39,1%	1.080	729	72,7%
90	52	6,0%	590	374	39,7%	1.090	736	73,4%
100	58	6,7%	600	381	40,4%	1.100	743	74,1%
110	64	7,3%	610	388	41,1%	1.110	750	74,7%
120	70	8,0%	620	395	41,8%	1.120	758	75,4%
130	76	8,7%	630	402	42,4%	1.130	765	76,1%
140	82	9,3%	640	409	43,1%	1.140	772	76,8%
150	88	10,0%	650	416	43,8%	1.150	780	77,4%
160	94	10,7%	660	423	44,4%	1.160	787	78,1%
170	100	11,3%	670	431	45,1%	1.170	794	78,8%
180	106	12,0%	680	438	45,8%	1.180	801	79,5%
190	112	12,7%	690	445	46,5%	1.190	809	80,1%
200	118	13,3%	700	452	47,1%	1.200	816	80,8%
210	124	14,0%	710	459	47,8%	1.210	823	81,5%
220	130	14,7%	720	467	48,5%	1.220	831	82,2%
230	136	15,3%	730	474	49,2%	1.230	838	82,8%
240	143	16,0%	740	481	49,8%	1.240	845	83,5%
250	149	16,7%	750	489	50,5%	1.250	852	84,2%
260	155	17,3%	760	496	51,2%	1.260	860	84,8%
270	161	18,0%	770	503	51,9%	1.270	867	85,5%
280	168	18,7%	780	510	52,5%	1.280	874	86,2%
290	174	19,3%	790	518	53,2%	1.290	881	86,9%
300	180	20,0%	800	525	53,9%	1.300	889	87,5%
310	186	20,7%	810	532	54,5%	1.310	896	88,2%
320	193	21,3%	820	540	55,2%	1.320	903	88,9%
330	199	22,0%	830	547	55,9%	1.330	911	89,6%
340	206	22,7%	840	554	56,6%	1.340	918	90,2%
350	212	23,3%	850	561	57,2%	1.350	925	90,9%
360	219	24,0%	860	569	57,9%	1.360	932	91,6%
370	225	24,7%	870	576	58,6%	1.370	940	92,3%
380	232	25,3%	880	583	59,3%	1.380	947	92,9%
390	238	26,0%	890	590	59,9%	1.390	954	93,6%
400	245	26,7%	900	598	60,6%	1.400	961	94,3%
410	251	27,3%	910	605	61,3%	1.410	969	94,9%
420	258	28,0%	920	612	62,0%	1.420	976	95,6%
430	264	28,7%	930	620	62,6%	1.430	983	96,3%
440	271	29,3%	940	627	63,3%	1.440	991	97,0%
450	278	30,0%	950	634	64,0%	1.450	998	97,6%
460	284	30,7%	960	641	64,6%	1.460	1.005	98,3%
470	291	31,3%	970	649	65,3%	1.470	1.012	99,0%
480	298	32,0%	980	656	66,0%	1.480	1.020	99,7%
490	305	32,7%	990	663	66,7%			
500	311	33,3%	1.000	670	67,3%			

Bearing charts - KTE 1500

Level mm	Content Liter	Level %	Level mm	Content Liter	Level %	Level mm	Content Liter	Level %
10	9	0,7%	510	489	34,3%	1.010	1.030	68,0%
20	18	1,3%	520	500	35,0%	1.020	1.041	68,7%
30	27	2,0%	530	510	35,7%	1.030	1.052	69,4%
40	36	2,7%	540	520	36,4%	1.040	1.063	70,0%
50	45	3,3%	550	531	37,0%	1.050	1.074	70,7%
60	54	4,0%	560	541	37,7%	1.060	1.084	71,4%
70	63	4,7%	570	552	38,4%	1.070	1.095	72,1%
80	72	5,3%	580	562	39,1%	1.080	1.106	72,7%
90	81	6,0%	590	573	39,7%	1.090	1.117	73,4%
100	90	6,7%	600	584	40,4%	1.100	1.128	74,1%
110	99	7,3%	610	594	41,1%	1.110	1.139	74,7%
120	108	8,0%	620	605	41,8%	1.120	1.150	75,4%
130	118	8,7%	630	616	42,4%	1.130	1.161	76,1%
140	127	9,3%	640	626	43,1%	1.140	1.172	76,8%
150	136	10,0%	650	637	43,8%	1.150	1.183	77,4%
160	145	10,7%	660	648	44,4%	1.160	1.194	78,1%
170	155	11,3%	670	659	45,1%	1.170	1.205	78,8%
180	164	12,0%	680	669	45,8%	1.180	1.216	79,5%
190	173	12,7%	690	680	46,5%	1.190	1.226	80,1%
200	183	13,3%	700	691	47,1%	1.200	1.237	80,8%
210	192	14,0%	710	702	47,8%	1.210	1.248	81,5%
220	202	14,7%	720	713	48,5%	1.220	1.259	82,2%
230	211	15,3%	730	724	49,2%	1.230	1.270	82,8%
240	221	16,0%	740	735	49,8%	1.240	1.281	83,5%
250	230	16,7%	750	746	50,5%	1.250	1.292	84,2%
260	240	17,3%	760	757	51,2%	1.260	1.303	84,8%
270	250	18,0%	770	768	51,9%	1.270	1.314	85,5%
280	259	18,7%	780	779	52,5%	1.280	1.325	86,2%
290	269	19,3%	790	790	53,2%	1.290	1.336	86,9%
300	279	20,0%	800	800	53,9%	1.300	1.347	87,5%
310	288	20,7%	810	811	54,5%	1.310	1.358	88,2%
320	298	21,3%	820	822	55,2%	1.320	1.368	88,9%
330	308	22,0%	830	833	55,9%	1.330	1.379	89,6%
340	318	22,7%	840	844	56,6%	1.340	1.390	90,2%
350	328	23,3%	850	855	57,2%	1.350	1.401	90,9%
360	337	24,0%	860	866	57,9%	1.360	1.412	91,6%
370	347	24,7%	870	877	58,6%	1.370	1.423	92,3%
380	357	25,3%	880	888	59,3%	1.380	1.434	92,9%
390	367	26,0%	890	899	59,9%	1.390	1.445	93,6%
400	377	26,7%	900	910	60,6%	1.400	1.456	94,3%
410	387	27,3%	910	921	61,3%	1.410	1.467	94,9%
420	397	28,0%	920	932	62,0%	1.420	1.478	95,6%
430	407	28,7%	930	942	62,6%	1.430	1.489	96,3%
440	418	29,3%	940	953	63,3%	1.440	1.500	97,0%
450	428	30,0%	950	964	64,0%	1.450	1.510	97,6%
460	438	30,7%	960	975	64,6%	1.460	1.521	98,3%
470	448	31,3%	970	986	65,3%	1.470	1.532	99,0%
480	458	32,0%	980	997	66,0%	1.480	1.543	99,7%
490	469	32,7%	990	1.008	66,7%			
500	479	33,3%	1.000	1.019	67,3%			

2.5.8.2 Bearing charts for KTE 2000, KTE 2500, KTE 3000

Bearing charts - KTE 2000

Level mm	Content Liter	Level %	Level mm	Content Liter	Level %	Level mm	Content Liter	Level %	Level mm	Content Liter	Level %	Level mm	Content Liter	Level %	Level mm	Content Liter	Level %
10	12	0,7%	260	330	17,3%	510	669	34,3%	760	1.028	51,2%	1010	1.393	68,0%	1260	1.758	84,8%
20	25	1,3%	270	344	18,0%	520	683	35,0%	770	1.043	51,9%	1020	1.408	68,7%	1270	1.773	85,5%
30	37	2,0%	280	357	18,7%	530	697	35,7%	780	1.057	52,5%	1030	1.422	69,4%	1280	1.787	86,2%
40	49	2,7%	290	370	19,3%	540	711	36,4%	790	1.072	53,2%	1040	1.437	70,0%	1290	1.802	86,9%
50	62	3,3%	300	383	20,0%	550	725	37,0%	800	1.086	53,9%	1050	1.451	70,7%	1300	1.816	87,5%
60	74	4,0%	310	397	20,7%	560	739	37,7%	810	1.101	54,5%	1060	1.466	71,4%	1310	1.831	88,2%
70	87	4,7%	320	410	21,3%	570	753	38,4%	820	1.116	55,2%	1070	1.481	72,1%	1320	1.846	88,9%
80	99	5,3%	330	423	22,0%	580	768	39,1%	830	1.130	55,9%	1080	1.495	72,7%	1330	1.860	89,6%
90	112	6,0%	340	437	22,7%	590	782	39,7%	840	1.145	56,6%	1090	1.510	73,4%	1340	1.875	90,2%
100	125	6,7%	350	450	23,3%	600	796	40,4%	850	1.159	57,2%	1100	1.524	74,1%	1350	1.889	90,9%
110	137	7,3%	360	463	24,0%	610	810	41,1%	860	1.174	57,9%	1110	1.539	74,7%	1360	1.904	91,6%
120	150	8,0%	370	477	24,7%	620	825	41,8%	870	1.189	58,6%	1120	1.554	75,4%	1370	1.919	92,3%
130	163	8,7%	380	490	25,3%	630	839	42,4%	880	1.203	59,3%	1130	1.568	76,1%	1380	1.933	92,9%
140	175	9,3%	390	504	26,0%	640	853	43,1%	890	1.218	59,9%	1140	1.583	76,8%	1390	1.948	93,6%
150	188	10,0%	400	517	26,7%	650	868	43,8%	900	1.232	60,6%	1150	1.597	77,4%	1400	1.962	94,3%
160	201	10,7%	410	531	27,3%	660	882	44,4%	910	1.247	61,3%	1160	1.612	78,1%	1410	1.977	94,9%
170	214	11,3%	420	545	28,0%	670	897	45,1%	920	1.262	62,0%	1170	1.627	78,8%	1420	1.992	95,6%
180	226	12,0%	430	558	28,7%	680	911	45,8%	930	1276	62,6%	1180	1.641	79,5%	1430	2.006	96,3%
190	239	12,7%	440	572	29,3%	690	926	46,5%	940	1291	63,3%	1190	1.656	80,1%	1440	2.021	97,0%
200	252	13,3%	450	586	30,0%	700	940	47,1%	950	1305	64,0%	1200	1.670	80,8%	1450	2.035	97,6%
210	265	14,0%	460	600	30,7%	710	955	47,8%	960	1320	64,6%	1210	1.685	81,5%	1460	2.050	98,3%
220	278	14,7%	470	613	31,3%	720	970	48,5%	970	1335	65,3%	1220	1.700	82,2%	1470	2.065	99,0%
230	291	15,3%	480	627	32,0%	730	984	49,2%	980	1349	66,0%	1230	1.714	82,8%	1480	2.079	99,7%
240	304	16,0%	490	641	32,7%	740	999	49,8%	990	1364	66,7%	1240	1.729	83,5%			
250	317	16,7%	500	655	33,3%	750	1.013	50,5%	1000	1378	67,3%	1250	1.743	84,2%			

Bearing charts - KTE 2500

Level mm	Content Liter	Level %	Level mm	Content Liter	Level %	Level mm	Content Liter	Level %
10	17	0,7%	510	913	34,3%	1.010	1.891	68,0%
20	34	1,3%	520	932	35,0%	1.020	1.910	68,7%
30	51	2,0%	530	951	35,7%	1.030	1.930	69,4%
40	68	2,7%	540	970	36,4%	1.040	1.950	70,0%
50	85	3,3%	550	989	37,0%	1.050	1.969	70,7%
60	102	4,0%	560	1.008	37,7%	1.060	1.989	71,4%
70	119	4,7%	570	1.027	38,4%	1.070	2.009	72,1%
80	136	5,3%	580	1.046	39,1%	1.080	2.029	72,7%
90	154	6,0%	590	1.066	39,7%	1.090	2.048	73,4%
100	171	6,7%	600	1.085	40,4%	1.100	2.068	74,1%
110	188	7,3%	610	1.104	41,1%	1.110	2.088	74,7%
120	206	8,0%	620	1.124	41,8%	1.120	2.107	75,4%
130	223	8,7%	630	1.143	42,4%	1.130	2.127	76,1%
140	240	9,3%	640	1.162	43,1%	1.140	2.147	76,8%
150	258	10,0%	650	1.182	43,8%	1.150	2.166	77,4%
160	275	10,7%	660	1.201	44,4%	1.160	2.186	78,1%
170	293	11,3%	670	1.221	45,1%	1.170	2.206	78,8%
180	310	12,0%	680	1.241	45,8%	1.180	2.226	79,5%
190	328	12,7%	690	1.260	46,5%	1.190	2.245	80,1%
200	346	13,3%	700	1.280	47,1%	1.200	2.265	80,8%
210	363	14,0%	710	1.300	47,8%	1.210	2.285	81,5%
220	381	14,7%	720	1.319	48,5%	1.220	2.304	82,2%
230	399	15,3%	730	1.339	49,2%	1.230	2.324	82,8%
240	417	16,0%	740	1.359	49,8%	1.240	2.344	83,5%
250	435	16,7%	750	1.378	50,5%	1.250	2.363	84,2%
260	453	17,3%	760	1.398	51,2%	1.260	2.383	84,8%
270	470	18,0%	770	1.418	51,9%	1.270	2.403	85,5%
280	488	18,7%	780	1.438	52,5%	1.280	2.423	86,2%
290	506	19,3%	790	1.457	53,2%	1.290	2.442	86,9%
300	525	20,0%	800	1.477	53,9%	1.300	2.462	87,5%
310	543	20,7%	810	1.497	54,5%	1.310	2.482	88,2%
320	561	21,3%	820	1.516	55,2%	1.320	2.501	88,9%
330	579	22,0%	830	1.536	55,9%	1.330	2.521	89,6%
340	597	22,7%	840	1.556	56,6%	1.340	2.541	90,2%
350	615	23,3%	850	1.575	57,2%	1.350	2.560	90,9%
360	634	24,0%	860	1.595	57,9%	1.360	2.580	91,6%
370	652	24,7%	870	1.615	58,6%	1.370	2.600	92,3%
380	670	25,3%	880	1.635	59,3%	1.380	2.620	92,9%
390	689	26,0%	890	1.654	59,9%	1.390	2.639	93,6%
400	707	26,7%	900	1.674	60,6%	1.400	2.659	94,3%
410	726	27,3%	910	1.694	61,3%	1.410	2.679	94,9%
420	744	28,0%	920	1.713	62,0%	1.420	2.698	95,6%
430	763	28,7%	930	1.733	62,6%	1.430	2.718	96,3%
440	782	29,3%	940	1.753	63,3%	1.440	2.738	97,0%
450	800	30,0%	950	1.772	64,0%	1.450	2.757	97,6%
460	819	30,7%	960	1.792	64,6%	1.460	2.777	98,3%
470	838	31,3%	970	1.812	65,3%	1.470	2.797	99,0%
480	856	32,0%	980	1.832	66,0%	1.480	2.817	99,7%
490	875	32,7%	990	1.851	66,7%			
500	894	33,3%	1.000	1.871	67,3%			

Bearing charts - KTE 3000

Level mm	Content Liter	Level %	Level mm	Content Liter	Level %	Level mm	Content Liter	Level %
10	22	0,7%	510	1156	34,3%	1.010	2.380	68,0%
20	43	1,3%	520	1.180	35,0%	1.020	2.404	68,7%
30	65	2,0%	530	1.204	35,7%	1.030	2.429	69,4%
40	87	2,7%	540	1.228	36,4%	1.040	2.453	70,0%
50	108	3,3%	550	1.252	37,0%	1.050	2.478	70,7%
60	130	4,0%	560	1.276	37,7%	1.060	2.503	71,4%
70	152	4,7%	570	1.300	38,4%	1.070	2.527	72,1%
80	174	5,3%	580	1.324	39,1%	1.080	2.552	72,7%
90	196	6,0%	590	1.348	39,7%	1.090	2.577	73,4%
100	218	6,7%	600	1.372	40,4%	1.100	2.601	74,1%
110	240	7,3%	610	1.396	41,1%	1.110	2.626	74,7%
120	262	8,0%	620	1.421	41,8%	1.120	2.650	75,4%
130	284	8,7%	630	1.445	42,4%	1.130	2.675	76,1%
140	306	9,3%	640	1.469	43,1%	1.140	2.700	76,8%
150	328	10,0%	650	1.494	43,8%	1.150	2.724	77,4%
160	351	10,7%	660	1.518	44,4%	1.160	2.749	78,1%
170	373	11,3%	670	1.542	45,1%	1.170	2.774	78,8%
180	395	12,0%	680	1.567	45,8%	1.180	2.798	79,5%
190	418	12,7%	690	1.592	46,5%	1.190	2.823	80,1%
200	440	13,3%	700	1.616	47,1%	1.200	2.847	80,8%
210	463	14,0%	710	1.641	47,8%	1.210	2.872	81,5%
220	485	14,7%	720	1.665	48,5%	1.220	2.897	82,2%
230	508	15,3%	730	1.690	49,2%	1.230	2.921	82,8%
240	530	16,0%	740	1.715	49,8%	1.240	2.946	83,5%
250	553	16,7%	750	1.739	50,5%	1.250	2.971	84,2%
260	575	17,3%	760	1.764	51,2%	1.260	2.995	84,8%
270	598	18,0%	770	1.789	51,9%	1.270	3.020	85,5%
280	621	18,7%	780	1.813	52,5%	1.280	3.044	86,2%
290	644	19,3%	790	1.838	53,2%	1.290	3.069	86,9%
300	667	20,0%	800	1.862	53,9%	1.300	3.094	87,5%
310	689	20,7%	810	1.887	54,5%	1.310	3.118	88,2%
320	712	21,3%	820	1.912	55,2%	1.320	3.143	88,9%
330	735	22,0%	830	1.936	55,9%	1.330	3.168	89,6%
340	758	22,7%	840	1.961	56,6%	1.340	3.192	90,2%
350	781	23,3%	850	1.986	57,2%	1.350	3.217	90,9%
360	804	24,0%	860	2.010	57,9%	1.360	3.241	91,6%
370	828	24,7%	870	2.035	58,6%	1.370	3.266	92,3%
380	851	25,3%	880	2.059	59,3%	1.380	3.291	92,9%
390	874	26,0%	890	2.084	59,9%	1.390	3.315	93,6%
400	897	26,7%	900	2.109	60,6%	1.400	3.340	94,3%
410	921	27,3%	910	2.133	61,3%	1.410	3.365	94,9%
420	944	28,0%	920	2.158	62,0%	1.420	3.389	95,6%
430	967	28,7%	930	2.183	62,6%	1.430	3.414	96,3%
440	991	29,3%	940	2.207	63,3%	1.440	3.438	97,0%
450	1.014	30,0%	950	2.232	64,0%	1.450	3.463	97,6%
460	1.038	30,7%	960	2.256	64,6%	1.460	3.488	98,3%
470	1.061	31,3%	970	2.281	65,3%	1.470	3.512	99,0%
480	1.085	32,0%	980	2.306	66,0%	1.480	3.537	99,7%
490	1.109	32,7%	990	2.330	66,7%			
500	1.133	33,3%	1.000	2.355	67,3%			

2.5.8.3 Bearing charts for KTE 4000, KTE 6000, KTE 9000

Bearing charts - KTE 4000

Level mm	Content Liter	Level %	Level mm	Content Liter	Level %	Level mm	Content Liter	Level %	Level mm	Content Liter	Level %	Level mm	Content Liter	Level %	Level mm	Content Liter	Level %
10	26	0,7%	260	698	17,3%	510	1.400	34,3%	760	2.130	51,2%	1.010	2.868	68,0%	1.260	3.607	84,8%
20	53	1,3%	270	726	18,0%	520	1.428	35,0%	770	2.159	51,9%	1.020	2..898	68,7%	1.270	3.637	85,5%
30	79	2,0%	280	753	18,7%	530	1.457	35,7%	780	2.189	52,5%	1.030	2.928	69,4%	1.280	3.666	86,2%
40	105	2,7%	290	781	19,3%	540	1.486	36,4%	790	2.218	53,2%	1.040	2.957	70,0%	1.290	3.696	86,9%
50	132	3,3%	300	809	20,0%	550	1.514	37,0%	800	2.248	53,9%	1.050	2.987	70,7%	1.300	3.725	87,5%
60	158	4,0%	310	836	20,7%	560	1.543	37,7%	810	2.277	54,5%	1.060	3.016	71,4%	1.310	3.755	88,2%
70	185	4,7%	320	864	21,3%	570	1.572	38,4%	820	2.307	55,2%	1.070	3.046	72,1%	1.320	3.784	88,9%
80	212	5,3%	330	892	22,0%	580	1.601	39,1%	830	2.337	55,9%	1.080	3.075	72,7%	1.330	3.814	89,6%
90	238	6,0%	340	920	22,7%	590	1.630	39,7%	840	2.366	56,6%	1.090	3.105	73,4%	1.340	3.844	90,2%
100	265	6,7%	350	947	23,3%	600	1.659	40,4%	850	2.396	57,2%	1.100	3.134	74,1%	1.350	3.873	90,9%
110	292	7,3%	360	975	24,0%	610	1.688	41,1%	860	2.425	57,9%	1.110	3.164	74,7%	1.360	3.903	91,6%
120	318	8,0%	370	1.003	24,7%	620	1.717	41,8%	870	2.455	58,6%	1.120	3.193	75,4%	1.370	3.932	92,3%
130	345	8,7%	380	1.031	25,3%	630	1.747	42,4%	880	2.484	59,3%	1.130	3.223	76,1%	1.380	3.962	92,9%
140	372	9,3%	390	1.059	26,0%	640	1.776	43,1%	890	2.514	59,9%	1.140	3.253	76,8%	1.390	3.991	93,6%
150	399	10,0%	400	1.087	26,7%	650	1.805	43,8%	900	2.543	60,6%	1.150	3.282	77,4%	1.400	4.021	94,3%
160	426	10,7%	410	1.116	27,3%	660	1.835	44,4%	910	2.573	61,3%	1.160	3.312	78,1%	1.410	4.050	94,9%
170	453	11,3%	420	1.144	28,0%	670	1.864	45,1%	920	2.602	62,0%	1.170	3.341	78,8%	1.420	4.080	95,6%
180	480	12,0%	430	1.172	28,7%	680	1.893	45,8%	930	2.632	62,6%	1.180	3.371	79,5%	1.430	4.110	96,3%
190	507	12,7%	440	1.200	29,3%	690	1.923	46,5%	940	2.662	63,3%	1.190	3.400	80,1%	1.440	4.139	97,0%
200	534	13,3%	450	1.229	30,0%	700	1.952	47,1%	950	2.691	64,0%	1.200	3.430	80,8%	1.450	4.169	97,6%
210	562	14,0%	460	1.257	30,7%	710	1.982	47,8%	960	2.721	64,6%	1.210	3.459	81,5%	1.460	4.198	98,3%
220	589	14,7%	470	1.285	31,3%	720	2.011	48,5%	970	2.750	65,3%	1.220	3.489	82,2%	1.470	4.228	99,0%
230	616	15,3%	480	1.314	32,0%	730	2.041	49,2%	980	2.780	66,0%	1.230	3.519	82,8%	1.480	4.257	99,7%
240	643	16,0%	490	1.342	32,7%	740	2.071	49,8%	990	2.809	66,7%	1.240	3.548	83,5%			
250	671	16,7%	500	1.371	33,3%	750	2.100	50,5%	1.000	2.839	67,3%	1.250	3.578	84,2%			

Bearing charts - KTE 6000

Level mm	Content Liter	Level %	Level mm	Content Liter	Level %	Level mm	Content Liter	Level %
10	39	0,7%	510	2.061	34,3%	1.010	4.194	68,0%
20	78	1,3%	520	2.103	35,0%	1.020	4.237	68,7%
30	117	2,0%	530	2.144	35,7%	1.030	4.280	69,4%
40	157	2,7%	540	2.186	36,4%	1.040	4.322	70,0%
50	196	3,3%	550	2.228	37,0%	1.050	4.365	70,7%
60	235	4,0%	560	2.270	37,7%	1.060	4.408	71,4%
70	274	4,7%	570	2.313	38,4%	1.070	4.451	72,1%
80	314	5,3%	580	2.355	39,1%	1.080	4.494	72,7%
90	353	6,0%	590	2.397	39,7%	1.090	4.537	73,4%
100	393	6,7%	600	2.439	40,4%	1.100	4.580	74,1%
110	433	7,3%	610	2.482	41,1%	1.110	4.623	74,7%
120	472	8,0%	620	2.524	41,8%	1.120	4.665	75,4%
130	512	8,7%	630	2.566	42,4%	1.130	4.708	76,1%
140	552	9,3%	640	2.609	43,1%	1.140	4.751	76,8%
150	591	10,0%	650	2.651	43,8%	1.150	4.794	77,4%
160	631	10,7%	660	2.694	44,4%	1.160	4.837	78,1%
170	671	11,3%	670	2.737	45,1%	1.170	4.880	78,8%
180	711	12,0%	680	2.779	45,8%	1.180	4.923	79,5%
190	751	12,7%	690	2.822	46,5%	1.190	4.965	80,1%
200	791	13,3%	700	2.865	47,1%	1.200	5.008	80,8%
210	831	14,0%	710	2.908	47,8%	1.210	5.051	81,5%
220	872	14,7%	720	2.951	48,5%	1.220	5.094	82,2%
230	912	15,3%	730	2.994	49,2%	1.230	5.137	82,8%
240	952	16,0%	740	3.037	49,8%	1.240	5.180	83,5%
250	992	16,7%	750	3.079	50,5%	1.250	5.223	84,2%
260	1.033	17,3%	760	3.122	51,2%	1.260	5.266	84,8%
270	1.073	18,0%	770	3.165	51,9%	1.270	5.308	85,5%
280	1.114	18,7%	780	3.208	52,5%	1.280	5.351	86,2%
290	1.154	19,3%	790	3.251	53,2%	1.290	5.394	86,9%
300	1.195	20,0%	800	3.294	53,9%	1.300	5.437	87,5%
310	1.236	20,7%	810	3.337	54,5%	1.310	5.480	88,2%
320	1.276	21,3%	820	3.379	55,2%	1.320	5.523	88,9%
330	1.317	22,0%	830	3.422	55,9%	1.330	5.566	89,6%
340	1.358	22,7%	840	3.465	56,6%	1.340	5.608	90,2%
350	1.399	23,3%	850	3.508	57,2%	1.350	5.651	90,9%
360	1.440	24,0%	860	3.551	57,9%	1.360	5.694	91,6%
370	1.481	24,7%	870	3.594	58,6%	1.370	5.737	92,3%
380	1.522	25,3%	880	3.637	59,3%	1.380	5.780	92,9%
390	1.563	26,0%	890	3.680	59,9%	1.390	5.823	93,6%
400	1.604	26,7%	900	3.722	60,6%	1.400	5.866	94,3%
410	1.645	27,3%	910	3.765	61,3%	1.410	5.908	94,9%
420	1.687	28,0%	920	3.808	62,0%	1.420	5.951	95,6%
430	1.728	28,7%	930	3.851	62,6%	1.430	5.994	96,3%
440	1.769	29,3%	940	3.894	63,3%	1.440	6.037	97,0%
450	1.811	30,0%	950	3.937	64,0%	1.450	6.080	97,6%
460	1.852	30,7%	960	3.980	64,6%	1.460	6.123	98,3%
470	1.894	31,3%	970	4.022	65,3%	1.470	6.166	99,0%
480	1.936	32,0%	980	4.065	66,0%	1.480	6.209	99,7%
490	1.977	32,7%	990	4.108	66,7%			
500	2.019	33,3%	1.000	4.151	67,3%			

Bearing charts - KTE 9000

Level mm	Content Liter	Level %	Level mm	Content Liter	Level %	Level mm	Content Liter	Level %
10	61	0,7%	510	3.192	34,3%	1.010	6.460	68,0%
20	122	1,3%	520	3.256	35,0%	1.020	6.526	68,7%
30	183	2,0%	530	3.321	35,7%	1.030	6.591	69,4%
40	244	2,7%	540	3.385	36,4%	1.040	6.657	70,0%
50	305	3,3%	550	3.450	37,0%	1.050	6.722	70,7%
60	367	4,0%	560	3.514	37,7%	1.060	6.788	71,4%
70	428	4,7%	570	3.579	38,4%	1.070	6.854	72,1%
80	489	5,3%	580	3.644	39,1%	1.080	6.919	72,7%
90	551	6,0%	590	3.709	39,7%	1.090	6.985	73,4%
100	612	6,7%	600	3.774	40,4%	1.100	7.050	74,1%
110	674	7,3%	610	3.839	41,1%	1.110	7.116	74,7%
120	735	8,0%	620	3.904	41,8%	1.120	7.182	75,4%
130	797	8,7%	630	3.969	42,4%	1.130	7.247	76,1%
140	859	9,3%	640	4.034	43,1%	1.140	7.313	76,8%
150	921	10,0%	650	4.099	43,8%	1.150	7.378	77,4%
160	983	10,7%	660	4.164	44,4%	1.160	7.444	78,1%
170	1.045	11,3%	670	4.230	45,1%	1.170	7.510	78,8%
180	1.107	12,0%	680	4.295	45,8%	1.180	7.575	79,5%
190	1.169	12,7%	690	4.361	46,5%	1.190	7.641	80,1%
200	1.231	13,3%	700	4.426	47,1%	1.200	7.706	80,8%
210	1.293	14,0%	710	4.492	47,8%	1.210	7.772	81,5%
220	1.356	14,7%	720	4.557	48,5%	1.220	7.838	82,2%
230	1.418	15,3%	730	4.623	49,2%	1.230	7.903	82,8%
240	1.480	16,0%	740	4.689	49,8%	1.240	7.969	83,5%
250	1.543	16,7%	750	4.754	50,5%	1.250	8.034	84,2%
260	1.606	17,3%	760	4.820	51,2%	1.260	8.100	84,8%
270	1.668	18,0%	770	4.885	51,9%	1.270	8.166	85,5%
280	1.731	18,7%	780	4.951	52,5%	1.280	8.231	86,2%
290	1.794	19,3%	790	5.017	53,2%	1.290	8.297	86,9%
300	1.857	20,0%	800	5.082	53,9%	1.300	8.362	87,5%
310	1.919	20,7%	810	5.148	54,5%	1.310	8.428	88,2%
320	1.982	21,3%	820	5.213	55,2%	1.320	8.494	88,9%
330	2.045	22,0%	830	5.279	55,9%	1.330	8.559	89,6%
340	2.109	22,7%	840	5.345	56,6%	1.340	8.625	90,2%
350	2.172	23,3%	850	5.410	57,2%	1.350	8.690	90,9%
360	2.235	24,0%	860	5.476	57,9%	1.360	8.756	91,6%
370	2.298	24,7%	870	5.541	58,6%	1.370	8.822	92,3%
380	2.362	25,3%	880	5.607	59,3%	1.380	8.887	92,9%
390	2.425	26,0%	890	5.673	59,9%	1.390	8.953	93,6%
400	2.489	26,7%	900	5.738	60,6%	1.400	9.019	94,3%
410	2.552	27,3%	910	5.804	61,3%	1.410	9.084	94,9%
420	2.616	28,0%	920	5.870	62,0%	1.420	9.150	95,6%
430	2.680	28,7%	930	5.935	62,6%	1.430	9.215	96,3%
440	2.744	29,3%	940	6.001	63,3%	1.440	9.281	97,0%
450	2.807	30,0%	950	6.066	64,0%	1.450	9.347	97,6%
460	2.871	30,7%	960	6.132	64,6%	1.460	9.412	98,3%
470	2.935	31,3%	970	6.198	65,3%	1.470	9.478	99,0%
480	2.999	32,0%	980	6.263	66,0%	1.480	9.543	99,7%
490	3.064	32,7%	990	6.329	66,7%			
500	3.128	33,3%	1.000	6.394	67,3%			

2.5.8.4 Bearing charts for KTE 12000, KTE 15000

Bearing charts - KTE 12000

Level mm	Content Liter	Level %	Level mm	Content Liter	Level %	Level mm	Content Liter	Level %
10	53	0,5%	680	3.905	34,1%	1.350	8.159	67,7%
20	106	1,0%	690	3.966	34,6%	1.360	8.224	68,2%
30	160	1,5%	700	4.028	35,1%	1.370	8.289	68,7%
40	213	2,0%	710	4.089	35,6%	1.380	8.354	69,2%
50	267	2,5%	720	4.151	36,1%	1.390	8.419	69,7%
60	321	3,0%	730	4.212	36,6%	1.400	8.483	70,2%
70	375	3,5%	740	4.274	37,1%	1.410	8.548	70,7%
80	429	4,0%	750	4.336	37,6%	1.420	8.613	71,2%
90	483	4,5%	760	4.398	38,1%	1.430	8.678	71,8%
100	537	5,0%	770	4.460	38,6%	1.440	8.743	72,3%
110	592	5,5%	780	4.522	39,1%	1.450	8.808	72,8%
120	646	6,0%	790	4.584	39,6%	1.460	8.872	73,3%
130	701	6,5%	800	4.646	40,1%	1.470	8.937	73,8%
140	756	7,0%	810	4.708	40,6%	1.480	9.002	74,3%
150	811	7,5%	820	4.770	41,1%	1.490	9.067	74,8%
160	866	8,0%	830	4.833	41,6%	1.500	9.132	75,3%
170	921	8,5%	840	4.895	42,1%	1.510	9.197	75,8%
180	976	9,0%	850	4.958	42,6%	1.520	9.262	76,3%
190	1.032	9,5%	860	5.020	43,2%	1.530	9.326	76,8%
200	1.087	10,0%	870	5.083	43,7%	1.540	9.391	77,3%
210	1.143	10,5%	880	5.145	44,2%	1.550	9.456	77,8%
220	1.199	11,0%	890	5.208	44,7%	1.560	9.521	78,3%
230	1.255	11,5%	900	5.271	45,2%	1.570	9.586	78,8%
240	1.311	12,0%	910	5.334	45,7%	1.580	9.651	79,3%
250	1.367	12,5%	920	5.397	46,2%	1.590	9.715	79,8%
260	1.423	13,0%	930	5.460	46,7%	1.600	9.780	80,3%
270	1.480	13,5%	940	5.523	47,2%	1.610	9.845	80,8%
280	1.536	14,0%	950	5.586	47,7%	1.620	9.910	81,3%
290	1.593	14,6%	960	5.649	48,2%	1.630	9.975	81,8%
300	1.650	15,1%	970	5.712	48,7%	1.640	10.040	82,3%
310	1.707	15,6%	980	5.776	49,2%	1.650	10.104	82,8%
320	1.764	16,1%	990	5.839	49,7%	1.660	10.169	83,3%
330	1.821	16,6%	1.000	5.903	50,2%	1.670	10.234	83,8%
340	1.879	17,1%	1.010	5.966	50,7%	1.680	10.299	84,3%
350	1.936	17,6%	1.020	6.030	51,2%	1.690	10.364	84,8%
360	1.994	18,1%	1.030	6.094	51,7%	1.700	10.429	85,3%
370	2.051	18,6%	1.040	6.157	52,2%	1.710	10.493	85,8%
380	2.109	19,1%	1.050	6.221	52,7%	1.720	10.558	86,3%
390	2.167	19,6%	1.060	6.285	53,2%	1.730	10.623	86,8%
400	2.225	20,1%	1.070	6.349	53,7%	1.740	10.688	87,3%
410	2.284	20,6%	1.080	6.413	54,2%	1.750	10.753	87,8%
420	2.342	21,1%	1.090	6.477	54,7%	1.760	10.818	88,3%
430	2.401	21,6%	1.100	6.541	55,2%	1.770	10.882	88,8%
440	2.459	22,1%	1.110	6.605	55,7%	1.780	10.947	89,3%
450	2.518	22,6%	1.120	6.670	56,2%	1.790	11.012	89,8%
460	2.577	23,1%	1.130	6.734	56,7%	1.800	11.077	90,3%
470	2.636	23,6%	1.140	6.799	57,2%	1.810	11.142	90,8%
480	2.695	24,1%	1.150	6.863	57,7%	1.820	11.207	91,3%
490	2.755	24,6%	1.160	6.928	58,2%	1.830	11.272	91,8%
500	2.814	25,1%	1.170	6.992	58,7%	1.840	11.336	92,3%
510	2.874	25,6%	1.180	7.057	59,2%	1.850	11.401	92,8%
520	2.933	26,1%	1.190	7.122	59,7%	1.860	11.466	93,3%
530	2.993	26,6%	1.200	7.187	60,2%	1.870	11.531	93,8%
540	3.053	27,1%	1.210	7.252	60,7%	1.880	11.596	94,3%
550	3.113	27,6%	1.220	7.316	61,2%	1.890	11.661	94,8%
560	3.174	28,1%	1.230	7.381	61,7%	1.900	11.725	95,3%
570	3.234	28,6%	1.240	7.446	62,2%	1.910	11.790	95,8%
580	3.295	29,1%	1.250	7.511	62,7%	1.920	11.855	96,3%
590	3.355	29,6%	1.260	7.576	63,2%	1.930	11.920	96,8%
600	3.416	30,1%	1.270	7.641	63,7%	1.940	11.985	97,3%
610	3.477	30,6%	1.280	7.705	64,2%	1.950	12.050	97,8%
620	3.538	31,1%	1.290	7.770	64,7%	1.960	12.114	98,3%
630	3.599	31,6%	1.300	7.835	65,2%	1.970	12.179	98,8%
640	3.660	32,1%	1.310	7.900	65,7%	1.980	12.244	99,3%
650	3.721	32,6%	1.320	7.965	66,2%	1.990	12.309	99,8%
660	3.782	33,1%	1.330	8.030	66,7%			
670	3.843	33,6%	1.340	8.094	67,2%			

Bearing charts - KTE 15000

Level mm	Content Liter	Level %	Level mm	Content Liter	Level %	Level mm	Content Liter	Level %
10	63	0,5%	680	4.620	34,1%	1.350	9.630	67,7%
20	126	1,0%	690	4.693	34,6%	1.360	9.706	68,2%
30	190	1,5%	700	4.765	35,1%	1.370	9.782	68,7%
40	253	2,0%	710	4.838	35,6%	1.380	9.858	69,2%
50	317	2,5%	720	4.910	36,1%	1.390	9.935	69,7%
60	381	3,0%	730	4.983	36,6%	1.400	10.011	70,2%
70	445	3,5%	740	5.056	37,1%	1.410	10.087	70,7%
80	509	4,0%	750	5.129	37,6%	1.420	10.164	71,2%
90	573	4,5%	760	5.202	38,1%	1.430	10.240	71,8%
100	638	5,0%	770	5.275	38,6%	1.440	10.316	72,3%
110	702	5,5%	780	5.348	39,1%	1.450	10.392	72,8%
120	767	6,0%	790	5.421	39,6%	1.460	10.469	73,3%
130	832	6,5%	800	5.494	40,1%	1.470	10.545	73,8%
140	897	7,0%	810	5.567	40,6%	1.480	10.621	74,3%
150	962	7,5%	820	5.641	41,1%	1.490	10.697	74,8%
160	1.027	8,0%	830	5.714	41,6%	1.500	10.774	75,3%
170	1.093	8,5%	840	5.788	42,1%	1.510	10.850	75,8%
180	1.158	9,0%	850	5.861	42,6%	1.520	10.926	76,3%
190	1.224	9,5%	860	5.935	43,2%	1.530	11.002	76,8%
200	1.290	10,0%	870	6.009	43,7%	1.540	11.079	77,3%
210	1.356	10,5%	880	6.083	44,2%	1.550	11.155	77,8%
220	1.422	11,0%	890	6.157	44,7%	1.560	11.231	78,3%
230	1.488	11,5%	900	6.231	45,2%	1.570	11.307	78,8%
240	1.555	12,0%	910	6.305	45,7%	1.580	11.384	79,3%
250	1.621	12,5%	920	6.379	46,2%	1.590	11.460	79,8%
260	1.688	13,0%	930	6.453	46,7%	1.600	11.536	80,3%
270	1.755	13,5%	940	6.527	47,2%	1.610	11.613	80,8%
280	1.822	14,0%	950	6.602	47,7%	1.620	11.689	81,3%
290	1.889	14,6%	960	6.676	48,2%	1.630	11.765	81,8%
300	1.956	15,1%	970	6.751	48,7%	1.640	11.841	82,3%
310	2.024	15,6%	980	6.825	49,2%	1.650	11.918	82,8%
320	2.091	16,1%	990	6.900	49,7%	1.660	11.994	83,3%
330	2.159	16,6%	1.000	6.975	50,2%	1.670	12.070	83,8%
340	2.227	17,1%	1.010	7.049	50,7%	1.680	12.146	84,3%
350	2.295	17,6%	1.020	7.124	51,2%	1.690	12.223	84,8%
360	2.363	18,1%	1.030	7.199	51,7%	1.700	12.299	85,3%
370	2.432	18,6%	1.040	7.274	52,2%	1.710	12.375	85,8%
380	2.500	19,1%	1.050	7.350	52,7%	1.720	12.451	86,3%
390	2.569	19,6%	1.060	7.425	53,2%	1.730	12.528	86,8%
400	2.637	20,1%	1.070	7.500	53,7%	1.740	12.604	87,3%
410	2.706	20,6%	1.080	7.575	54,2%	1.750	12.680	87,8%
420	2.775	21,1%	1.090	7.651	54,7%	1.760	12.757	88,3%
430	2.845	21,6%	1.100	7.726	55,2%	1.770	12.833	88,8%
440	2.914	22,1%	1.110	7.802	55,7%	1.780	12.909	89,3%
450	2.983	22,6%	1.120	7.878	56,2%	1.790	12.985	89,8%
460	3.053	23,1%	1.130	7.953	56,7%	1.800	13.062	90,3%
470	3.123	23,6%	1.140	8.029	57,2%	1.810	13.138	90,8%
480	3.193	24,1%	1.150	8.105	57,7%	1.820	13.214	91,3%
490	3.263	24,6%	1.160	8.181	58,2%	1.830	13.290	91,8%
500	3.333	25,1%	1.170	8.257	58,7%	1.840	13.367	92,3%
510	3.404	25,6%	1.180	8.333	59,2%	1.850	13.443	92,8%
520	3.474	26,1%	1.190	8.409	59,7%	1.860	13.519	93,3%
530	3.545	26,6%	1.200	8.486	60,2%	1.870	13.595	93,8%
540	3.616	27,1%	1.210	8.562	60,7%	1.880	13.672	94,3%
550	3.687	27,6%	1.220	8.638	61,2%	1.890	13.748	94,8%
560	3.758	28,1%	1.230	8.714	61,7%	1.900	13.824	95,3%
570	3.829	28,6%	1.240	8.791	62,2%	1.910	13.900	95,8%
580	3.900	29,1%	1.250	8.867	62,7%	1.920	13.977	96,3%
590	3.972	29,6%	1.260	8.943	63,2%	1.930	14.053	96,8%
600	4.044	30,1%	1.270	9.020	63,7%	1.940	14.129	97,3%
610	4.116	30,6%	1.280	9.096	64,2%	1.950	14.206	97,8%
620	4.187	31,1%	1.290	9.172	64,7%	1.960	14.282	98,3%
630	4.259	31,6%	1.300	9.248	65,2%	1.970	14.358	98,8%
640	4.331	32,1%	1.310	9.325	65,7%	1.980	14.434	99,3%
650	4.403	32,6%	1.320	9.401	66,2%	1.990	14.511	99,8%
660	4.476	33,1%	1.330	9.477	66,7%			
670	4.548	33,6%	1.340	9.553	67,2%			

2.5.9 The Level Sensor

2.5.9.1 The Filling Level Switch (Mini Detector) (AE-100-E)

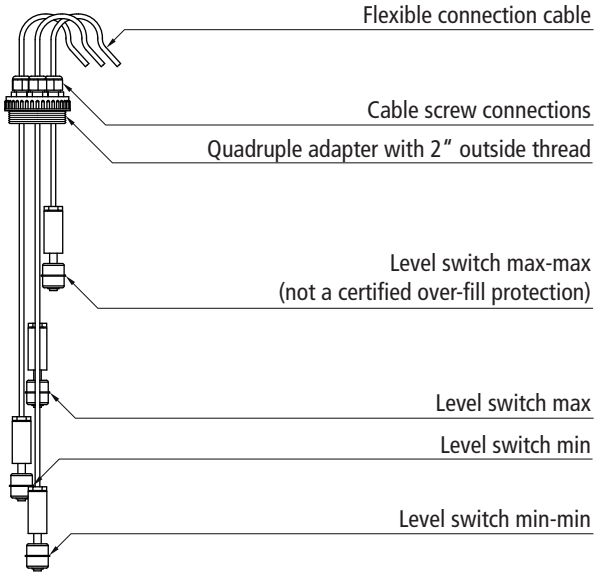

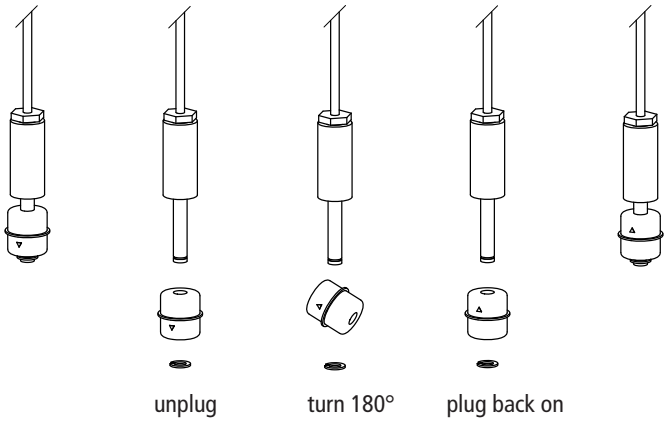

The level switch is made of stainless steel and is equipped with a flexible, oil-proof cable. The permissible temperature range for the cable is between -5°C and +50°C. The 5-meter-long connection cable is directly connected to the system control.

Level sensors detect the level filling level of a fluid in a tank. Two systems can be distinguished:
a.) a switching system with level switches and
b.) an electronic measuring system with sensors.

Level switches allow for using signals for automatic control, adjustment or signalling. An electronic measuring system converts the signal from the sensor into the respective switch signal and filling level using the pertaining evaluation electronics. If a level sensor of an electronic over-fill protection is used, the evaluation electronics convert the sensor signal into the respective switch signal.

Technical data		
Switching voltage	max. 200 V DC / max. 120 V AC	
Switching capacity	Max. 10 W	
Contact resistance	Max. 0.5 mOhm	
Switching current	Max. 0,5 A	
Cable size	2 x 0.5 mm^2 x 5,000 mm	
Material	floater, weight, shaft	stainless steel
	cable	PVC

ATTENTION Observe the technical data of the switch.

The electronic level switch (mini detector) serves the control and indication of accurately defined filling levels of the tank. When using a 4-cable screw connection, up to four level switches can be installed in a tank. A certified level switch is not required because it is only used as an operating contact within tank systems, for example for the pump controls „Pump On" (minimum contact) or „Pump Off" (maximum contact). For the alarm switch point „Overfilled" (max-max) only certified over-fill protections must be used.
The level switch can also be used to detect leaks.

The cable screw connections of the quadruple adapter allow for adjusting the desired level of the level switch and fastening it on this level. By turning the floater by 180° on the switch shaft, the level switch can be easily converted from a normally-closed contact into a normally-open contact.

2.5.9.2 Tank Level Indicator with Stable Floater Sliding Tube (AE-111)

Tank level indicators are usually used for the automatic switching on and off of pumps, if the prescribed maximum or minimum levels in tanks are violated. In addition, remote signalling or automatic emergency shutdowns - in (for example) the case that the tank level falls below the minimum level prescribed - are possible. There are two types of tank level indicators - fixed and flexible. Fixed level indicators have a massive metal sliding tube (normally of brass or stainless steel), on which a floater with an integrated magnetic ring glides in the sliding tube via an electrical reed contact switch - the magnetic ring serving to open or close the reed contact, as appropriate.

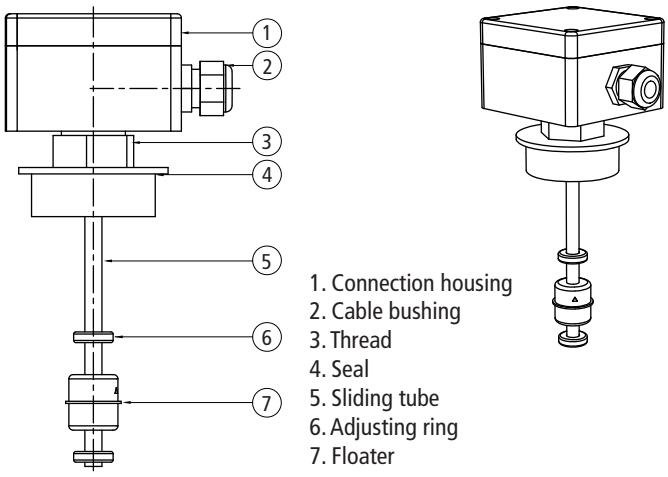

Contact function: changeover switch
Max. voltage: 250 V AC/DC
Switching current: 1 A, AC / 0.5 A DC
Switching capacity: 40 VA; cos fi > 0.7 / 5 W

Assembly and operation
Screw-in thread (insert from above). Several switching points are possible per floater magnetic switch (up to 4 on the standard model; a higher number available on request). Length of sliding tube up to 2,000 m per piece (sliding tubes longer than 2,000 mm are available on request).
Area of application
Suitable for nearly all liquids. With special models, layer separation level measuring is possible.
Output
S' switch: closes on floater rising
O' switch: opens on floater rising
U' switch: change-over contact (SPDT - simple changer).

2.5.9.3 The Electronic Level Indicator (AE-115-VI)

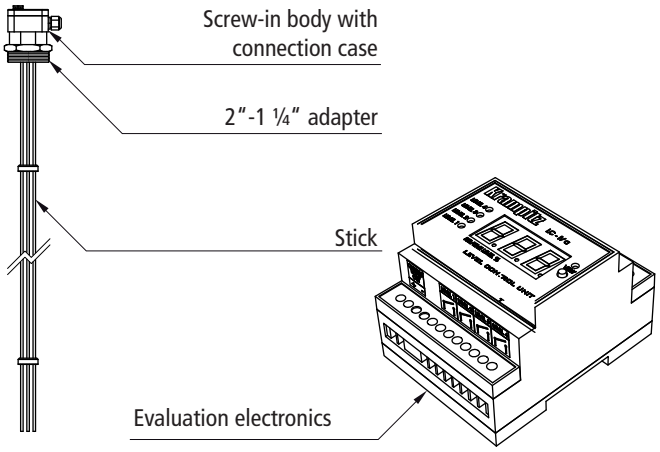

For a comfortable detection of the filling level, the KTE can be equipped with an electronic level indicator.
The electronic level indicator Level Control VI is a complete measuring system for detecting filling levels of containers. The system allows to adjust the tank height and to set up to four limiting values. The relay contacts are galvanically isolated from the system. The evaluation unit of the system shows the filling level in percent.
The electronic level indicator is certified and calibrated before delivery.

2.5.10 The Overfill Protection

Every tank for the storage of diesel fuel or heating oil, which is filled via a tank lorry connection, must be equipped with an overfill protection which interrupts the filling process or triggers an alarm sound before reaching the permissible filling level.
This does not apply to surface tanks with a capacity below 1,000 litres which are manually filled via nozzle without stationary connection.
Tanks with a capacity of more than 1,000 litres for the storage of diesel fuel or heating oil which are filled by road tank vehicles or through demountable tanks must be equipped with a limiting value transmitter, which serves as an overfill protection.

Tanks for the storage of other liquids hazardous to water and flammable substances, such as mineral oil, which are filled automatically, must be equipped with a certified overfill protection.
The over-fill protection must not be used as an operational switch point for controlling the refill device.

NOTE The used overfill protection must be certified for the respective storage tank.

NOTE Tanks must not be filled exceeding the permissible filling level. The permissible filling level depends on the tank type (cubic expansion coefficient) and is 95% of the tank height in case of the KTE.

2.5.10.1 The Limiting-Value Transmitter with PTC Thermistor - Only for Diesel Fuel and Heating Oil (AE-250)

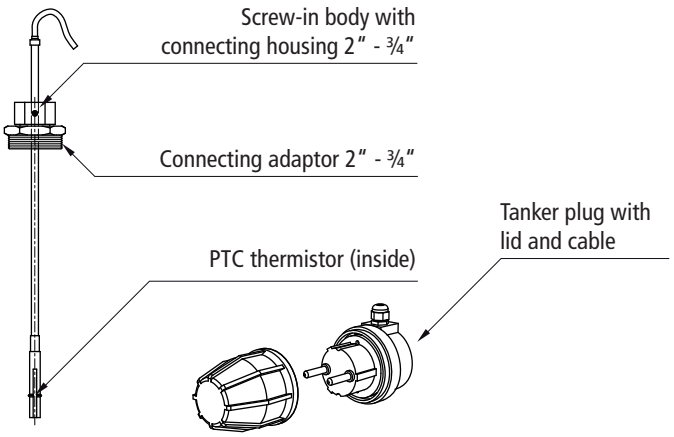

The tank level indicator based on a PTC thermistor for the approved overfill protection is installed using a 2´´ x ¾ ´´ connection adaptor in a 2´´ sleeve in the tank roof.
In combination with the overfill protection (evaluation electronics) on road tank vehicles, the limiting-value transmitter is a device preventing the overfilling of stationary tanks.
Stationary tanks for the storage of diesel fuel or heating oil which are filled by road tank vehicles must be equipped with a limiting-value transmitter.
Exception: tanks with a capacity less than 1,000 litres (see also installation instructions for limiting-value transmitter).

2.5.10.2 The Overfill Protection (AE-200) with Evaluation Electronics (AE-201)

The PTC thermistor-based level sensor of the certified overfill protection is installed via a 2´´ x ¾ ´´ connection adapter and a 2´´ connecting sleeve in the tank roof (see section about connection adapter).
A certified over-fill protection must always be installed if the tank is filled through an electric pump and stationary connections (also see installation instructions for overfill protection).
The overfill protection must be adjusted to the maximum allowed filling height of the tank.

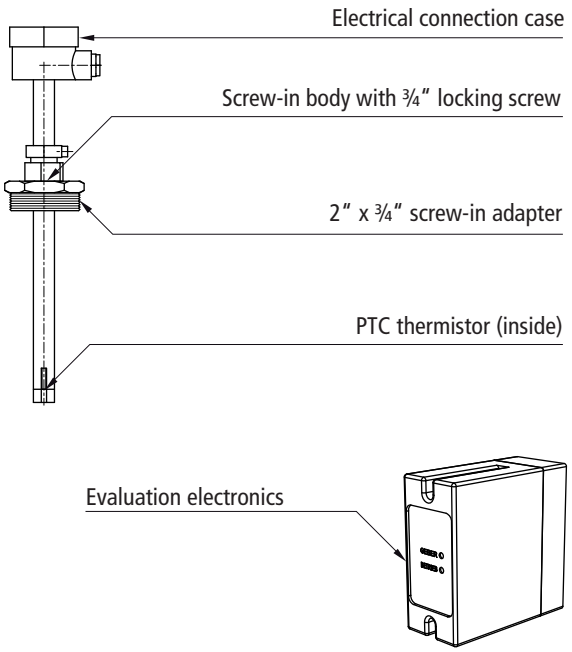

2.5.10.3 Overview: Switch Points and Control Commands

Filling level symbol	Designation	Filling level in percent	Level sensor type	Control command
++	max-max	95	limiting-value transmitter/ overfill protection in case of export application: mini detector	overfill alarm - pump off
+	max	70	mini detector	operating contact: pump off
–	min	40	mini detector	operating contact: pump on and signal indicating the repeat order of fuel
– –	min-min	10	mini detector	low-level alarm - system off

2.5.10.4 Overfill Acknowledgement Module (B-AE-100)

Explanation:
The B-AE-110 is used to signal or sound the overfill protection alarm to the tanker driver while the tank is being filled. The tanker driver is responsible for switching off the tanker pump. By pressing the acknowledgement button, the driver can switch off the overfill protection warning hooter. The flashing lamp is extinguished when the overfill protection non-wetting state is reached.
Area of use: optical and acoustical alarm box as signal for overfill protection.

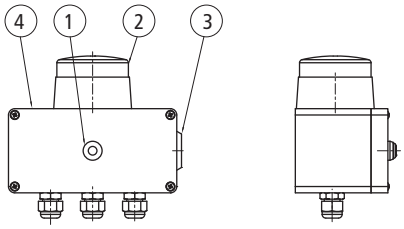

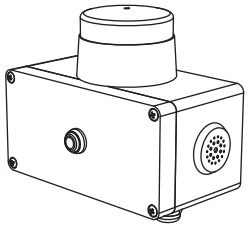

pos.	description
1	Acknowledgement button
2	Flashing lamp - flash power 1 joule
3	Hooter - noise level 95 db
4	Housing - degree of protection 54 IP
-/-	Power supply 24 V DC

Examples of use / terminal diagram: for tankers without tanker plug, for diesel

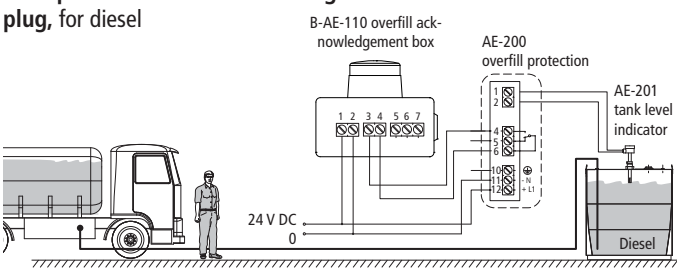

Examples of use / terminal diagram: for diesel

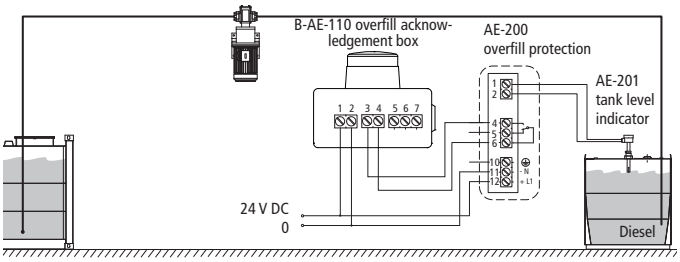

2.5.10.5 Overfill Acknowledgement Box with Tanker Plug (B-AE-907-Z)

Explanation:
The BA-AE-907-Z is used to automatically switch off the pump on the tanker or to signal the tanker driver while the tank is being filled. By pressing the acknowledgement button, the driver can switch off the overfill protection warning hooter. The flashing lamp is extinguished when the overfill protection non-wetting state is reached.
Area of use: optical and acoustical alarm box as signal for overfill protection with tanker cut-off.

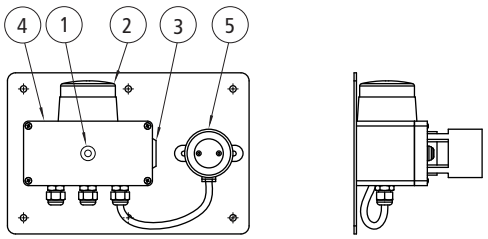

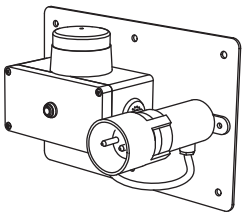

pos.	description
1	Acknowledgement button
2	Flashing lamp - flash power 1 joule
3	Hooter - noise level 95 db
4	Housing - degree of protection 54 IP
5	Tanker plug - 907-Z
-/-	Power supply 24 V DC

Examples of use / terminal diagram: for diesel

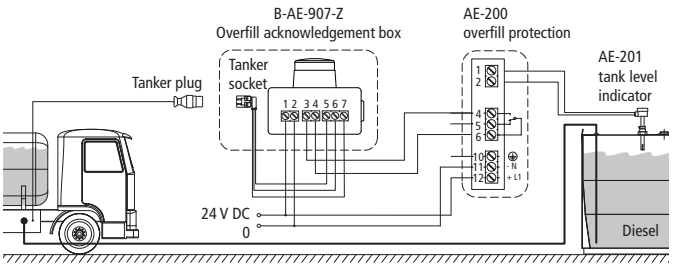

Examples of use / terminal diagram: for vegetable oil

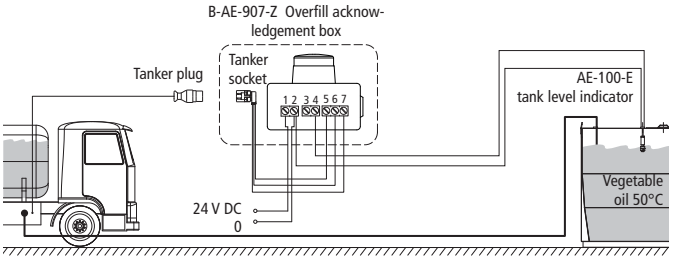

2.5.11 The Oil Warning Sensor (AE-303) with Detector and Evaluation Unit

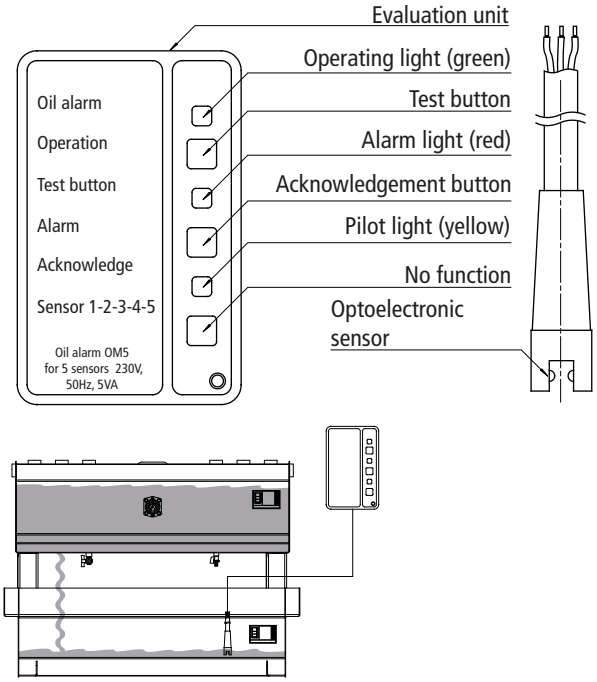

2.5.11.1 Function of Oil Alarm Unit

The oil alarm unit is an approved leakage detection warning system. Up to 5 sensors may be attached to one evaluation unit. The unit is used to quickly register any leakages of water or hazardous liquids (in accordance with VawS). If a sensor is immersed in liquid, the signal component registers the changed signal from the sensor, produces an optical and acoustic alarm and, in addition, activates the relay for the output signal.

The oil alarm unit's sensor registers the different behaviour of air and liquids. It is installed at the lowest point of the monitoring room. The integrated signal component constantly monitors the sensor's electrical output signals. The green light is on when it is in operation. If the sensor is in air, its signal component registers normal operating conditions: the green operating light is on, the red alarm light is off, and the relay is closed. If the sensor is immersed in oil, a leak (alarm) is registered: the red operation light comes on, the acoustic alarm is sounded and the relay is opened. In the event of alarm, the acoustic alarm signal may be switched off by pressing the "acknowledgement" button. Pressing this button a second time will reactivate it.
By the use of several sensors on one evaluation unit, the affected sensors may be closed by means of the number of the yellow monitoring light's flashing pulses. The successive flashing sequence comprises a period of approx. three seconds.
In the case of a power failure, the alarm will not be triggered. When power is restored the device is immediately operable. Any leakage occurring in the meantime will be registered.
The green operating light will come on as soon as power is supplied to the oil alarm unit. The test button enables a functional monitoring by simulating the alarm event.

2.5.11.2 Oil Alarm Unit Assembly

The oil alarm unit consists of a signal component and up to five sensors. The signal component and sensors are connected to each other by a three-wire cable up to 10 metres in length.
The unit's sensor consists of an infra-red transmitter and infra-red receiver, set at a fixed distance from each other. Together, they make up a photoelectric barrier. If there is air between the transmitter and receiver, most of the transmitted signals will reach the receiver - the optocoupler principle.
Contained in a shock-resistant plastic housing, the signal component consists of the display and operating elements as well as all the electronic components for evaluating the sensor's signals and converting them into a digital output signal. The output signal is then available as a potential-free relay contact (change-over).

2.5.12 The Pump Combination

The pump combination uses the KTE storage tank to supply remote daily tanks.
The pump combination contains an electrical pump and a hand wing pump in one case.
In the event of a failure or defect of the electrical pump, the hand pump ensures that the system can be operated without interruption. It also serves the ventilation of the suction pipe (for further details see the operating instructions for the pump combination).

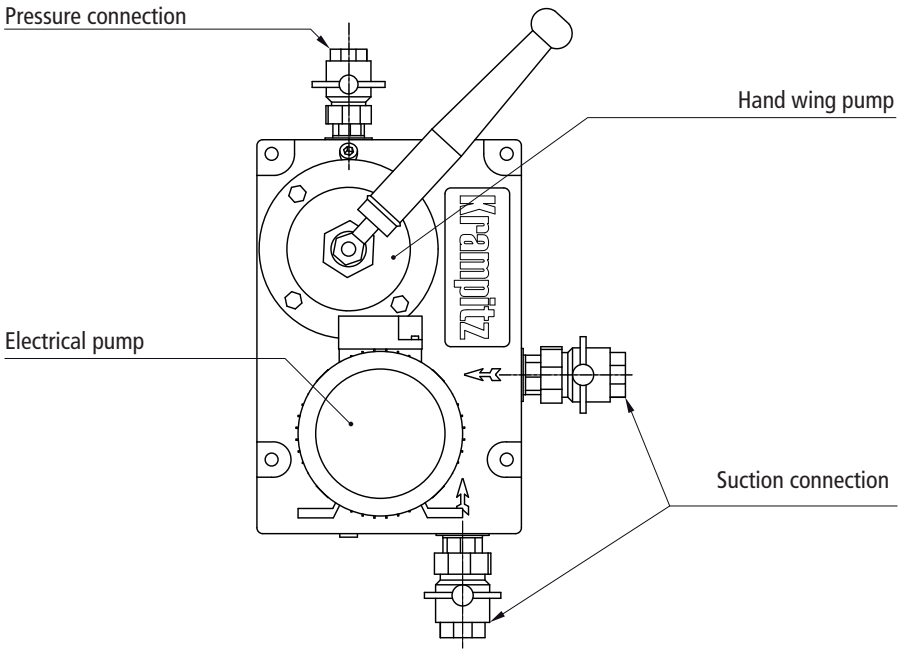

Further Pumps from the Product Range of Krampitz Tanksystem GmbH

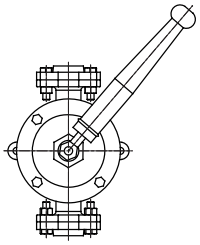

hand wing pump
from 20 litres/min
to 100 litres/min
Example: 20 litres/min

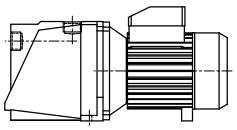

electrical centrifugal pump
from 45 litres/min
to 1,000 litres/min
Example: 80 litres/min

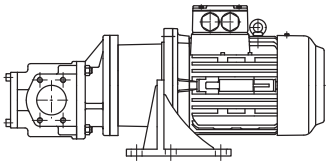

gear pump
from 6 litres/min
to 200 litres/min
Example: 200 litres/min

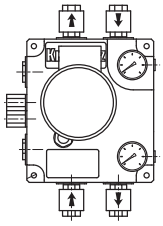

block pump unit
from 6 litres/min
to 26 litres/min
Example: 26 litres/min

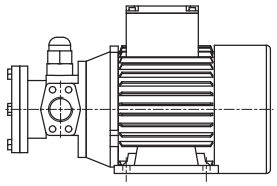

Gerotor pump
from 6 litres/min
to 26 litres/min
Example: 26 litres/min

Connection schemes for electropumps

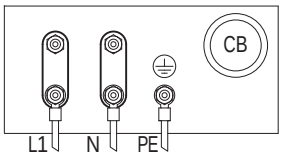

Connection scheme 230 V/AC
Alternating current (single-phase)
CB operating capacitor
(internally connected to motor,
no internal bridge required!)

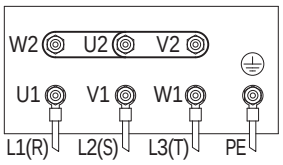

Connection scheme 380-420 V
Rotary current (three-phase)
Star connection

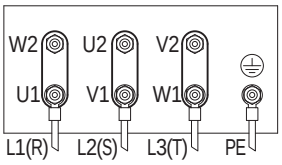

Connection scheme 220-240 V
Rotary current (three-phase)
Delta connection

2.5.13 Tank Heater (AM 800, AM 810)

The use of a tank heating with integrated temperature control between 8°C to 12°C and temperature limiter prevents reliably the paraffin precipitation of the light heating oil and diesel when temperatures sink. Thus, the pump and nozzle viscosity of the oil and diesel in the suction area is retained.

NOTE Not allowed/approved for media of hazard classes F and F+.

Power	Tank volume	Voltage
220 W	to 2,000 Liters	230 V, 50 Hz
1.500 W	to 8,000 Liters	230 V, 50 Hz
3 kW	to 15,000 Liters	400 V, 50 Hz
6 kW	to 25,000 Liters	400 V, 50 Hz

Tank heater (AE 800) up to 1,500 W / up to 8,000 litres

Tank heater greater (AE 810) than 1,500 W / from 8,000 litres

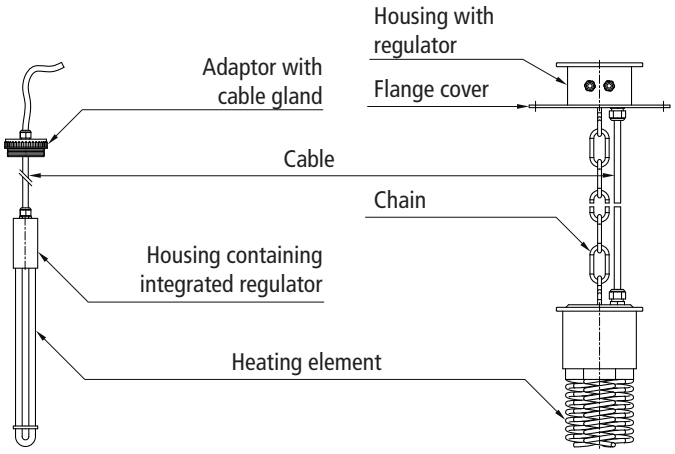

2.5.14 Krampitz Sealfix M

Krampitz Sealfix M is a thread sealant for oil-proof threaded connections. Sealfix M is applied to the cleaned thread area. The threaded connection is closed. After 15 to 30 minutes, Sealfix M has cured to a finger-tight degree.

NOTE The cleaned thread area must be totally free from grease and oil.

Example:
10 ml bottle

2.5.15 Corrosion Protection When Placed Outside

In the event that the KTE is planned to be placed outside, the tank must be coated with a weather-resistant lacquer finish. This finish requires sand blasting (SA 2.5), a priming coat and a 2-component lacquer coating (coat thickness respectively 80 micrometers). The standard colour of Krampitz Tanksystem GmbH for this series is RAL 7032 (pebble grey).
Further RAL colours are available.
For further details and prices please contact us.

3.1 Transporting the KTE

The KTE can be easily transported by fork lift or hand lift. The KTE with a capacity of 950 litres is equipped with two lifting brackets on its front wall. These lifting brackets allow for moving the tank with a crane. For KTEs of capacities ranging from 1,500 to 4,000 litres, roof reinforcements with integrated lifting brackets are used. KTEs exceeding these capacities can be moved using the four lifting brackets on the outside of the tank side walls.

WARNING During the transport, the appropriate, applicable safety regulations are to be observed and the tank protected from damage. The tank may be transported unless it is completely emptied, cleaned and degassed.

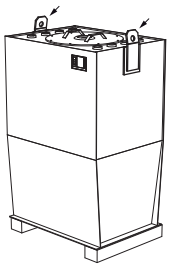

KTE 950
with lifting brackets

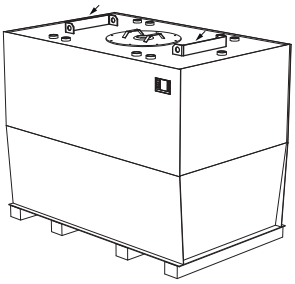

KTE with roof reinforcement
with lifting brackets 1,500 to 4,000 litres

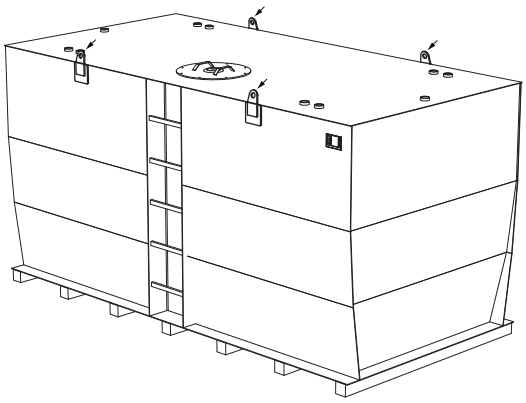

KTE with four lifting brackets welded
on the outside walls larger than 6,000 litres

3.2 Assembling the KTE

The KTE is equipped with feet (height 100 mm). These prevent reliably the formation of condensation water on the outer tank bottom and also ensure good visibility.
The KTE must only be placed on even and load-bearing floor space (minimum quality B 15 or equal). A stress analysis must be performed and presented.

WARNING Due to its single-walled design the KTE must be installed for the storage of water polluting media in an approved collecting pan

3.2.1 Assembly of the KTE in a Machine Room

Basically, storage tanks with maximum storage volume of 5,000 litres may be operated in a machine room. For tanks with a larger volume, a separate tank storage room is required.

3.2.2 Installation of KTE outside of a Machine Room

Outside of a machine room, up to 100,000 litres may be stored in a KTE in atank storage room.

3.2.3 Outdoor Installation of KTE

For the outdoor installation of KTE a sufficiently stable and level area is required.

NOTE If the KTE is to be set up outdoors, a weatherproof coating of the tank container is required.

3.3 Initial Commissioning

Before the KTE is filled the first time, the following point are to checked:
1. Proper mounting / assembly of the tank
2. Tightness and stability of the pipe connections
3. Proper connection of the sensors:
   a. Liquid level gauge b. Overfill prevention control
   c. Vacuum leak gauge d. Limit indicator
4. Stable base for the sealing plugs

3.4 Operating Sequence

- Check the ball valves. The ball valves on the delivery pipe must be closed.
- Connecting the power. This starts the sensors working.

WARNING The overfill prevention control will register an alarm in the first few seconds, since the PTC thermistor for the liquid level gauge has first to be heated up.

- Filling from a tanker:

1. As the volume of liquid in the tank increases, the switching point settings can be checked (if available these are: MIN-MIN, MIN, MAX, MAX-MAX).
2. As the limit indicator is wetted, the filling process will be automatically interrupted. The filling via a filling line from a tanker is prescribed for a volume size greater than 1,000 litres. This means that the day fuel tank may also be filled by means of the automatic cut-off nozzle directly from the tanker (dead man's switch principle).

- Filling with installation pump:

1. As the volume of liquid in the tank increases, the switching point settings can be checked (if available these are: MIN-MIN. MIN, MAX, MAX-MAX).
2. As the limit indicator is wetted, the pump must be automatically switched off.

- check pipe connections for tightness
- the KTE is ready for operation

4. DOCUMENTS

The KTE storage tanks are delivered with the documents below:

- inspection sheet in German language (two copies)
- drawing (simply)
- building authority permit Z-38.11-143 (simply)
- operating instructions for the individual module components, such as level sensor, overfill protection, pump combination

These documents are sent to the customer by mail. Only the delivery note is delivered together with the tank to avoid that important documents get lost at the construction site.

5. WARRANTY

Article 1 Warranty Scope

(1) The warranty covers system defects throughout the warranty period which occur during proper operation and use of the system and circuitry and which don't result from external causes of any kind, mechanical damages or non-compliance of regulations regarding the use of the system or circuitry.
(2) In addition, the warranty doesn't cover damages resulting from improper maintenance and repair work.

Article 2 Warranty Period

(1) In the event that defects occur during the warranty period, warranty claims must be made immediately, at the latest within two weeks, in writing.
(2) Only Krampitz Tanksystem GmbH is authorised to accept warranty claims.

Article 3 Handling

The warranty period begins when the system is taken into operation on-site. Any warranty claims made within the warranty period are reviewed. This only applies to the tank system. The warranty period is 24 months.
For fittings and devices (mechanical, electromechanical, electrical and electronic), supplied by external manufacturers, the warranty period is 6 months.

Article 4 Warranty Exclusion

Warranty claims cannot be made:

a. if the system, the circuitry or parts of the circuitry was damaged or destroyed by causes of force majeure or causes resulting from the unintended use of the system, in particular external or chemical mechanical causes;
b. in the event of damages resulting from improper treatment, in particular from non-observance of the provided operating instructions;
c. if the circuitry or parts of the circuitry weren't repaired or maintained by authorised representatives, staff or agent of Krampitz Tanksystem GmbH;
d. if the circuitry or parts of the circuitry are mechanically damaged

Article 5 Supplementary Provisions

(1) If a warranty case occurs, the legal relationship with us is exclusively governed by the afore-mentioned provisions. Further claims, in particular compensations for damage and loss of any kind caused by the system, circuitry, parts of the circuitry or their use, are excluded.
(2) The burden of proof for the proper operation and use of the system, circuitry or of parts of the circuitry according to the provided operating instructions shall be carried by the buyer.
3) Place of Performance, Governing Law and Place of Jurisdiction

The place of performance for the delivery is the place of destination, the place of performance for the payment is the contracting body's office. Supplementary to these terms and conditions of purchase, the German law applies. However, the application of the UN Convention on Contracts for the International Sale of Goods is excluded.

The sole place of jurisdiction - provided the contractor is a merchant who has been entered in the commercial register - is Lüneburg for all disputes arising directly or indirectly from this contract. In the event that the contractor is not a merchant who has been entered in the commercial register, the place of jurisdiction for claims asserted through legal dunning proceedings is Lüneburg. In the event that one or more provisions of this contract are or become to any extent invalid, then the remainder of these provisions shall continue in full force and effect.

NOTES

NOTES

Krampitz Tanksystem GmbH

Headquarters:
Dannenberger Str. 15
21368 Dahlenburg/Lbg.
Phone: +49(0)5851/9443-0
Fax: +49(0)5851/9443-21

Office:
Siedlung des Friedens 40
29410 Hansestadt Salzwedel
Phone: +49(0)3901/3088-100
Fax.:+49(0)3901/3088-131

Production Site Henningen:
Henningen 78
29410 Salzwedel/OT Henningen
Phone: +49(0)39038/9078-0
Fax: +49(0)39038/9078-10

Internet: www.krampitz.de
Email: info@krampitz.de