Type Series	Product Data Sheet - 11.2016
EQ-44-B **EQ-44-C**	**Pump Set for Oil Supply of Industrial Combustion Engines**

Characteristic	Area of Application / Media			Transportation / Installation	
					
	E12 hazardous to ground water	**E10** diesel / heating (fuel) oil / mineral oil			

The pump set allows the oil change and the oil supply of industrial combustion engines. The simple operation of the pump allows the respective two-way necessary conveying path can be switched by simply switching the direction of rotation of the electric engine. Each rotation is secured with a check valve. For pressure control is the pump with two pressure gauges and also equipped with a sight glass for visual inspection. In order to protect the electric motor from overloading, the pump has basically integrated for each rotation a bypass valve. Recommended for the transportation of mineral oil as well as liquids with a viscosity of 50 ~ 500 mm²/s (cSt) that don't harm the material of the pump.

- Installation in closed rooms but in any case safeguarded from bad weather, vertical or horizontal installation possible
- Before its first use, the pump has to be casted into the niche
- Has to be protected from running dry.

type	delivered volume	delivery pressure	suction head	voltage	current	frequency	rpm	power	weight
	litres/min.	bar	meters	V	A	Hz	U/min	kW	kg
Z-PG-13	13,0	⩽ 7,0	6,0	Δ 230 / Y 400	3,46 / 2,0	50 / 60	1.435 / 1.680	0,75 / 0,86	32
Z-PG-26-01	26,0	⩽ 7,0	6,0	Δ 230 / Y 400	3,46 / 2,0	50 / 60	1.435 / 1.680	0,75 / 0,86	32

- Flow rate and volume delivered related to mineral oils 50-150 mm² /s (cSt)
- Volume flow and input power change with other viscosities

Technical changes reserved!

Pump Set with Integrated check valve

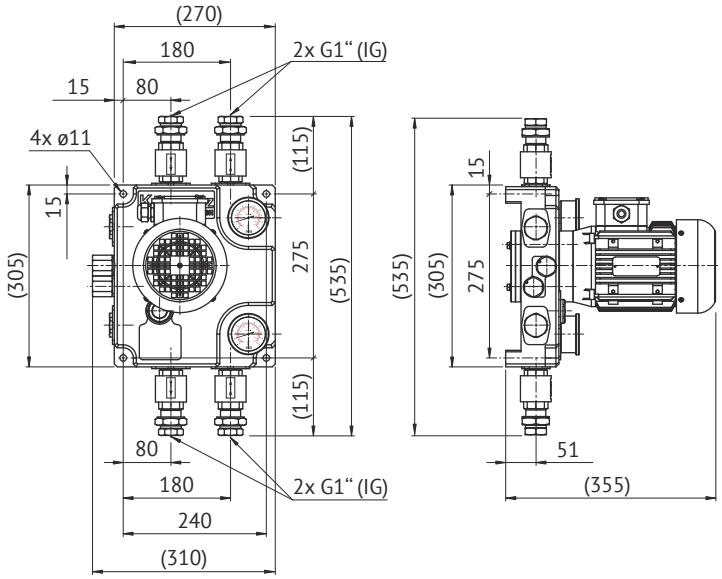

Rotation of the pump motor

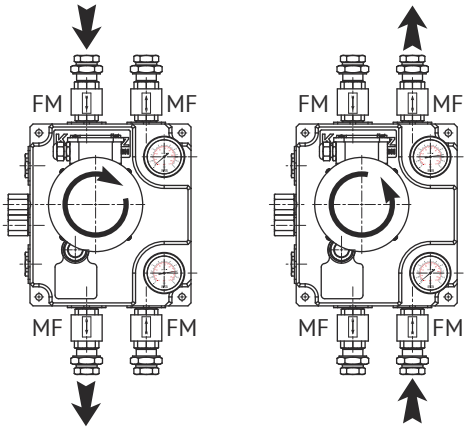

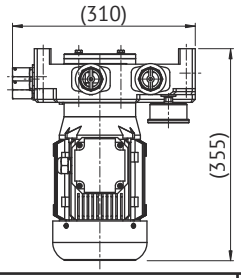

Schemata of connections - three-phase current

delta connection

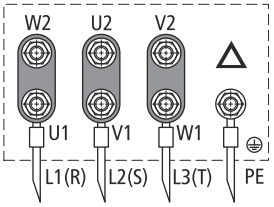

star circuit

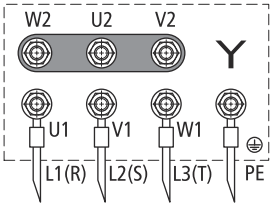

Material	Commodity code	Documentation	Sheet
Grey cast iron	841 381 000	Operation Manual 1x English	1 of 6

Krampitz Maschinentank GmbH | Dannenberger Str. 15 | D-21368 Dahlenburg | Telephone: +49(0)3901/3088-100 | Telefax: +49(0)3901/3088-131

Type Series	Product Data Sheet - 11.2016
EQ-44-B **EQ-44-C**	**Pump Set for Oil Supply of Industrial Combustion Engines**

Construction of the pump set

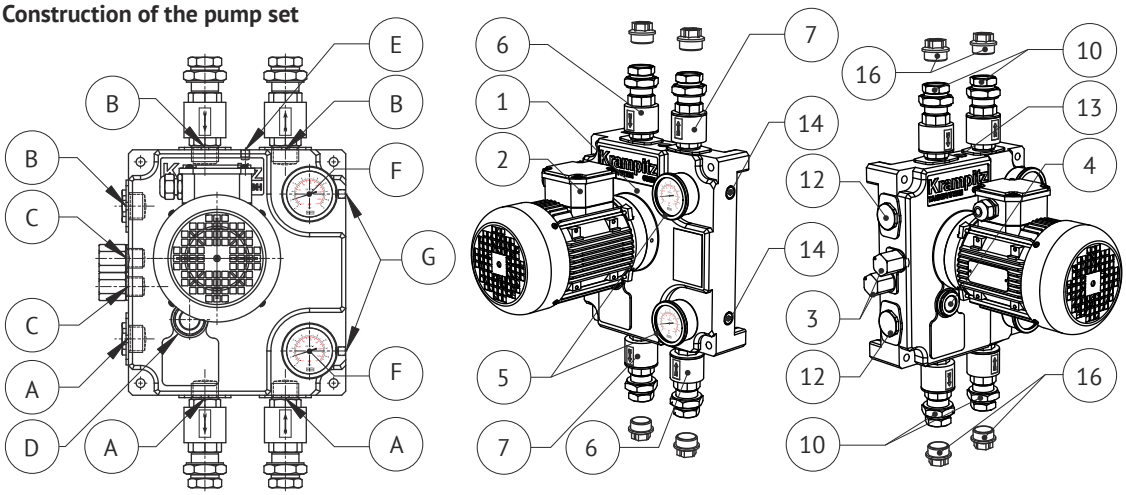

Pos.	Description	Connection
A	collectors with 3 piece connection	3x G1" (F)
B	collectors with 3 piece connection	3x G1" (F)
C	connections for pressure limiting valve	2x M20 (F)
D	connections for flow sight glass	1x G1" (F)
E	connections for filling hole	1x G1/4" (F)
F	connections for pressure gauge / drain	2x G1/4" (F)
G	connections for pressure gauge / drain	2x G1/4" (F)

Advantages:
- simple and robust construction
- no valves or ball valves directly necessary to the pump
- time- and space-saving installation
- minimum piping system
- vertical or horizontal installation possible
- integrated valves and fittings, e.g., flow sight glass, pressure gauge, check valves
- suction and filling with only one pump possible

Pos.	M	B	Quantity	Item.-no.	Description	Connection
	x	-	1	Z-PG-26-01	pump set, consists of:	
1.	x	-	1	-	gerotor pump	
2.	x	-	1	Z-PG-26-002	three phase motor	Δ 230 / Y 400 V, 50 Hz, 0,75 kW Δ 265 / Y 460 V, 60 Hz, 0,86 kW
3.	x	-	2	-	bypass valve (pressure relief valve) in factory delivery pressure default	M20 x 1,5 (M)
4.	x	-	1	AM-AL-25-001	flow sight glass with natural glass	G1" (M)
5.	x	-	2	AM-MS-14-001	pressure gauge (-1,0 to +9,0 bar)	G1/4" (M)
6.	x	-	2	F-MS-1-048	check valves type F-M (pump inlet)	G1" (F) x G1"(M)
7.	x	-	2	F-MS-1-049	check valves type M-F (pump outlet)	G1" (M) x G1"(F)
8.	-	-	0	F-MS-1-029	strainer	G1" (F) x G1" (F)
9.	-	-	0	F-MS-1-055	parallel nipple	G1" (M) x G1"(M)
10.	x	-	4	F-MS-1-053	screw connection straight, conical sealing with o-ring	G1" (F) x G1"(M)
11.	-	-	0	F-MS-1-054	screw connection elbow, conical sealing with o-ring	G1" (F) x G1"(M)
12.	x	-	2	F-MS-1-012	dummy plug, hexagonal head, with o-ring	G1" (M)
13.	x	-	1	N-S-14-001	filling hole, sealing screw	G1/4" (M)
14.	x	-	2	N-S-14-001	drain hole, sealing screw	G1/4" (M)
15.	-	-	0	-	hose at check hole shaft sealing ring	Da 8 mm x Di 4 mm, M6
16.	x	-	4	AM-947	treaded sealing plug	G1 (M)

- „M" - mounted, „B"- accessory pack, „G"- threaded pipe according to ISO 228-1, (F) - female thread, (M) - male thread
- storage / transport - close all openings with plugs or plastic covers

Technical changes reserved!

Material	Commodity code	Documentation	Sheet
Grey cast iron	841 381 000	Operation Manual 1x English	2 of 6

EQ-44-B EQ-44-C

Pump Set for Oil Supply of Industrial Combustion Engines

Pressure gauge of Z-PG optical recognition of flow direction

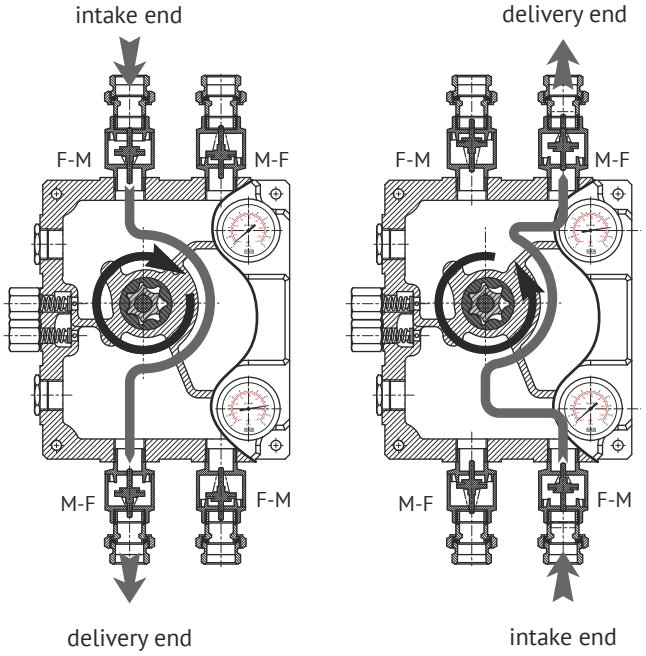

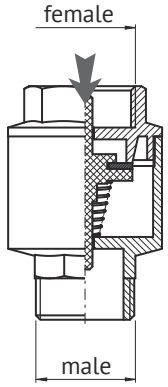

Item-no.: F-MS-1-048
check valve type F-M
(pump inlet)

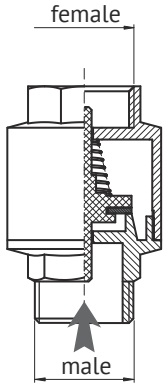

Item-no.: F-MS-1-049
check valve type M-F
(pump outlet)

pump characteristic curve
- related to mineral oils 50-150 mm^2 /s (cSt), RPM of 1.435 1/min, input power 0,75 kW
- medium motor oil 10W50, temperature 19°C
- volume flow and input power change with other viscosities

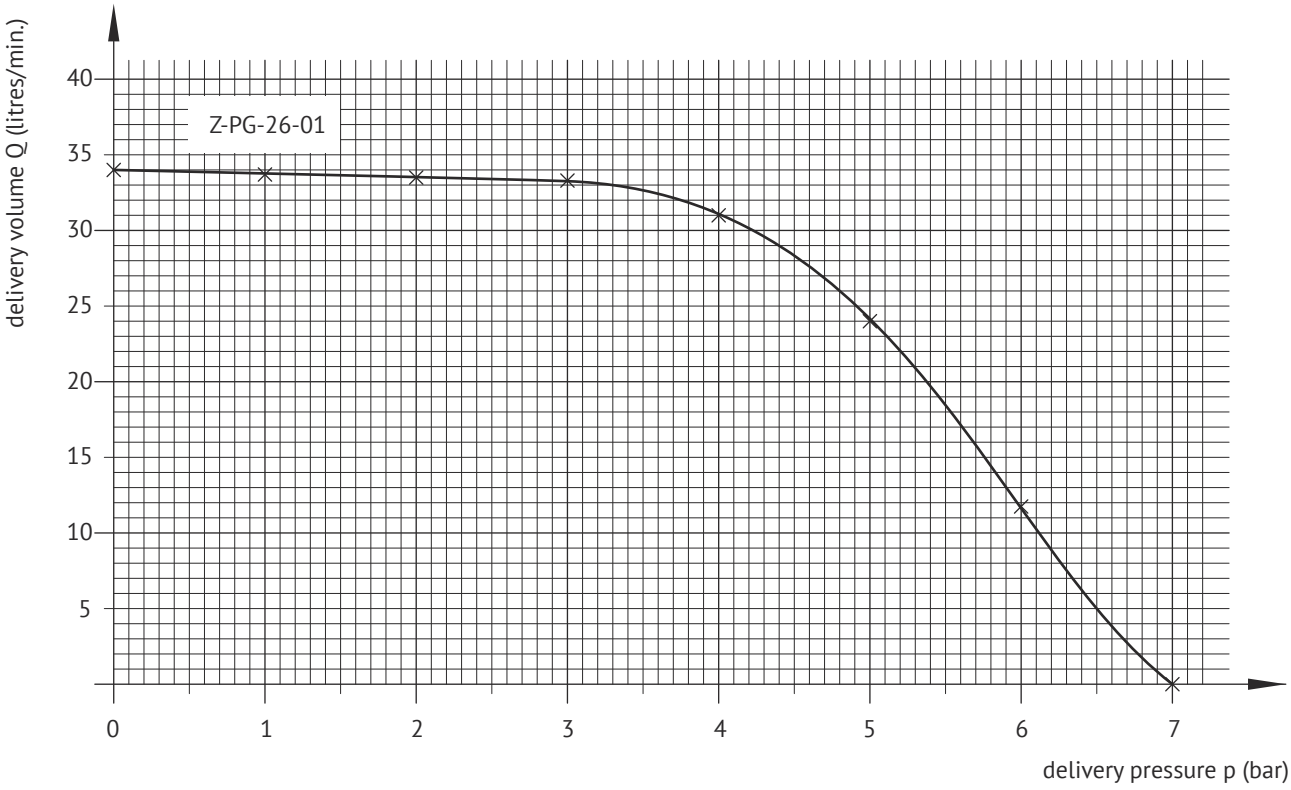

Technical changes reserved!

Material	Commodity code	Documentation	Sheet
Grey cast iron	841 381 000	Operation Manual 1x English	3 of 6

Type Series	Product Data Sheet - 11.2016
EQ-44-B **EQ-44-C**	**Pump Set for Oil Supply** **Combined Operation with One Pump**

Normally, when oil is changed, the waste oil is removed from the oil pan of the combustion engine by suction and fresh oil filled in the engine oil pan. Very often, fresh oil is pumped in the fuelling system from barrels or waste oil from the system is pumped in barrels for disposal because no other way of supply or disposal is available.

Combined operation with one pump

Along the first route, waste oil is pumped from the oil pan of the engine into the waste oil tank. After changing the rotation, fresh oil from the fresh oil tank is pumped in the oil pan of the engine.

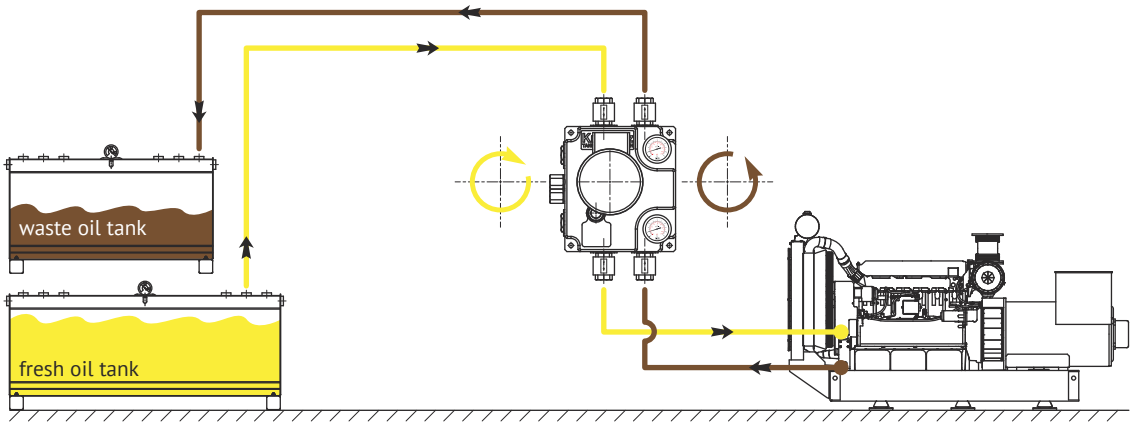

Schematic 001 - combined operation with one pumps

Waste oil is pumped from the oil pan of the engine into the waste oil tank. Then fresh oil from the fresh oil tank is pumped in the oil pan of the engine.

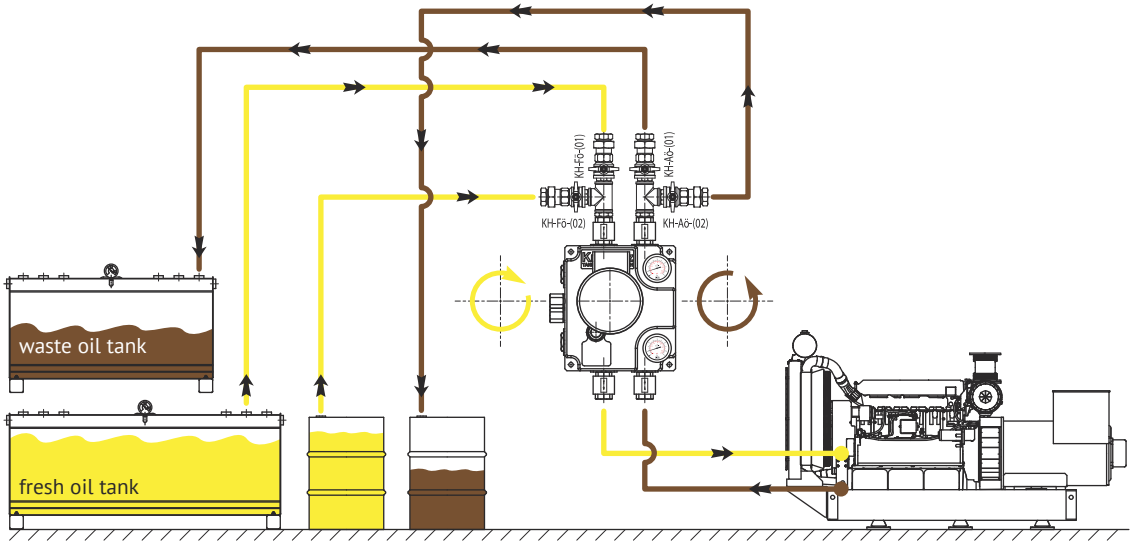

Schematic 002 - combined operation with one pump

Waste oil is pumped from the oil pan of the engine into the waste oil tank or a barrel. Then the same pump pumps fresh oil from the fresh oil tank or from a barrel in the oil pan of the engine.

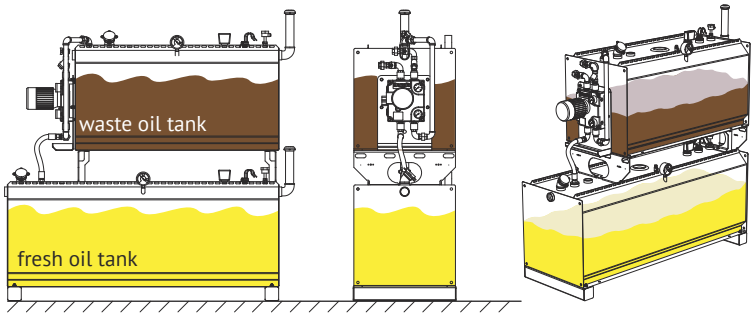

MINIMAL - complete oil supply system

realized following functions:

- continual oil supply to the engines from fresh oil tank (oil refilling)
- oil change: sucking the waste oil from the oil sump, filling the oil sump with fresh oil
- third-party fueling the system with fresh oil by means of tank car
- third-party disposal of the waste oil from waste oil tank by means of tank car

Technical changes reserved!

Material	Commodity code	Documentation	Sheet
Grey cast iron	841 381 000	Operation Manual 1x English	4 of 6

Type Series	Product Data Sheet - 11.2016
EQ-44-B **EQ-44-C**	**Pump Set for Oil Supply** **Separate with Two Pumps**

Two Z-PG units are needed for separate operation. The advantage is that fresh oil and waste oil cannot mix.

Waste oil pump: Along the first route, the waste oil pump pumps waste oil from the engine oil pan into the waste oil tank. Along the second route, the waste oil pump, after changeover, pumps the waste oil from the tank in barrels.
Fresh oil pump: Along the first route, the fresh oil pump pumps fresh oil from barrels in the fresh oil tank. Along the second route, the fresh oil pump, after changeover, pumps the fresh oil from the tank in the engine oil pan.

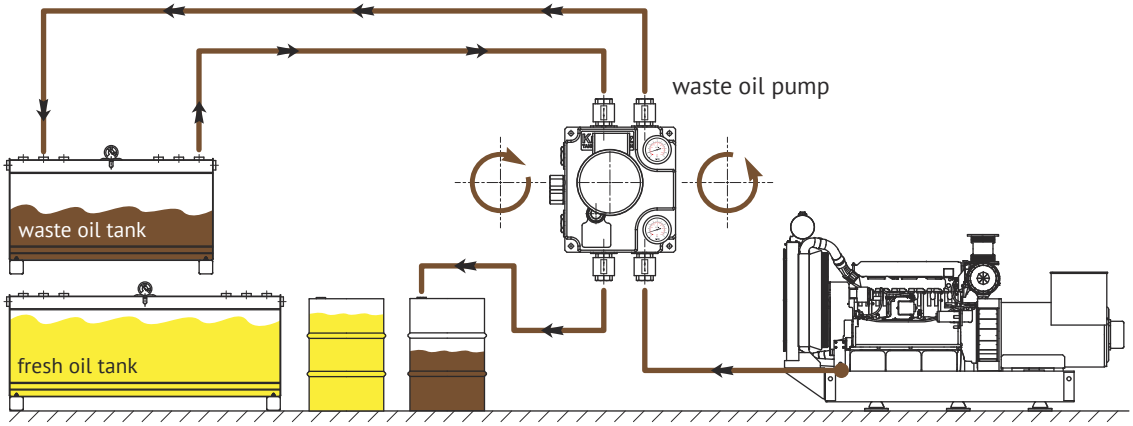

Schematic 003 - waste oil pump separate operation
The waste oil pump pumps waste oil from the engine oil pan into the waste oil tank. Then the waste oil pump pumps the waste oil from the tank in barrels for disposal.

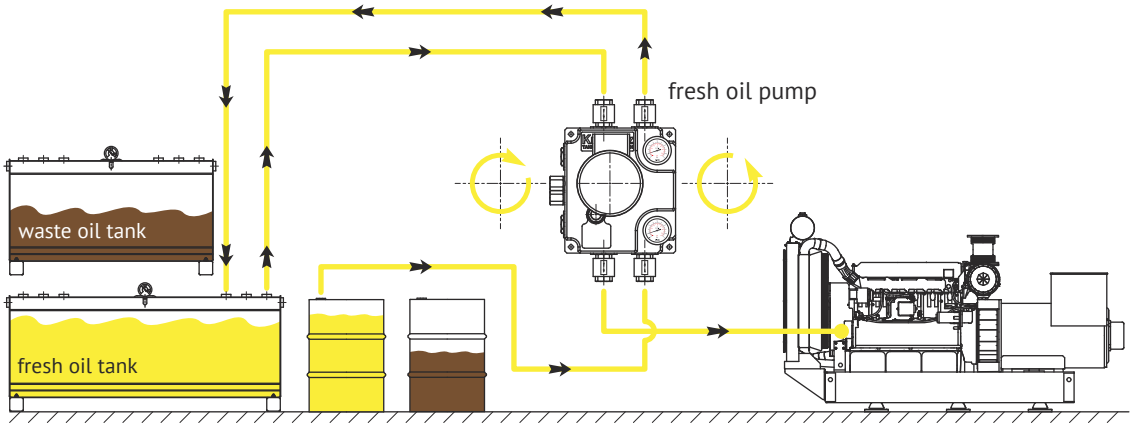

Schematic 004 - fresh oil pump separate operation
The fresh oil pump pumps fresh oil from barrels in the fresh oil tank. Then the fresh oil pump pumps the fresh oil from the tank in the engine oil pan.

IDEAL - complete oil supply system

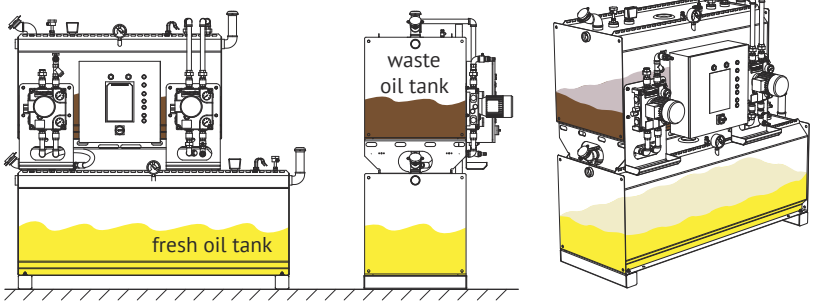

IDEAL - realized following functions:
- continual oil supply to the engines from reservoir
- oil change: sucking the waste oil from the oil sump, filling the oil sump with fresh oil
- fuelling the fresh oil tank from the barrel possible
- disposal of the waste oil from waste oil tank into barrel possible
- third-party fueling the system with fresh oil by means of tank car
- third-party disposal of the waste oil from waste
  oil tank by means of tank car

Technical changes reserved!

Material	Commodity code	Documentation	Sheet
Grey cast iron	841 381 000	Operation Manual 1x English	5 of 6

Type Series	Product Data Sheet - 11.2016
EQ-44-B **EQ-44-C**	**Fresh Oil Pump Set in Automatic Service**

Automatic holding of the oil level during operation of the combustion engine. After filling fresh oil in the engine oil pan, the system switches to automatic mode. The pump set is under pulse or level control.

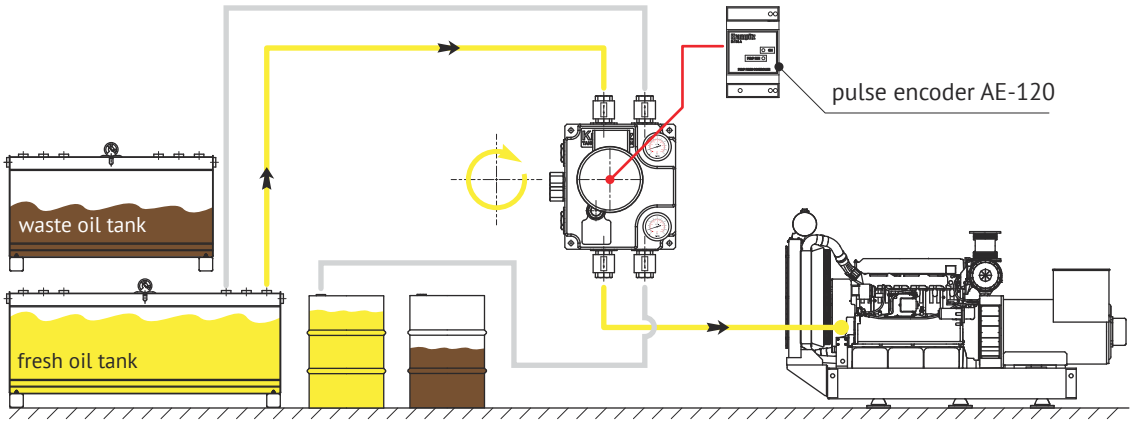

Schematic 005 – Automatic mode – fresh oil pumping set – pulse-controlled

The controlled run-time interruption in intervals of a few seconds causes the conveyed volume of the connected fresh oil pumping set to be reduced to about 15%. If more fresh oil is needed in the engine oil pan, the inlet solenoid at the engine oil pan opens and the fresh oil pump pumps small amounts of fresh oil in the oil pan of the engine as needed.

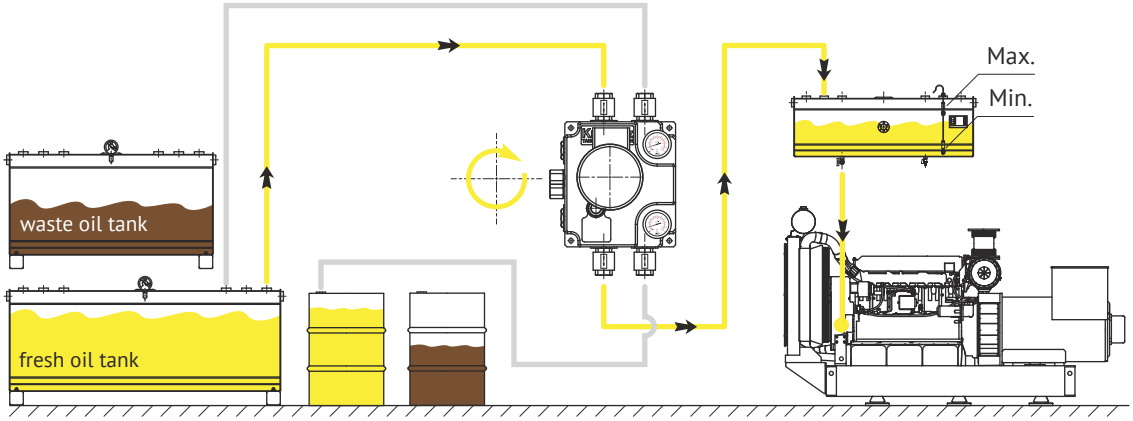

Schematic 006 - Automatic mode - fresh oil pumping set - level-controlled

One level transducer each for maximum and minimum level is installed in a day tank. The pump receives electric signals form the level transducers. If a „minimum level" signal is sent, the pump starts pumping fresh oil until the „maximum level" signal is received and the pump stops.

The elevated position of the day tank above the engine causes gravitational flow of fresh oil in the engine oil pan.

MAXIMAL – complete oil supply system

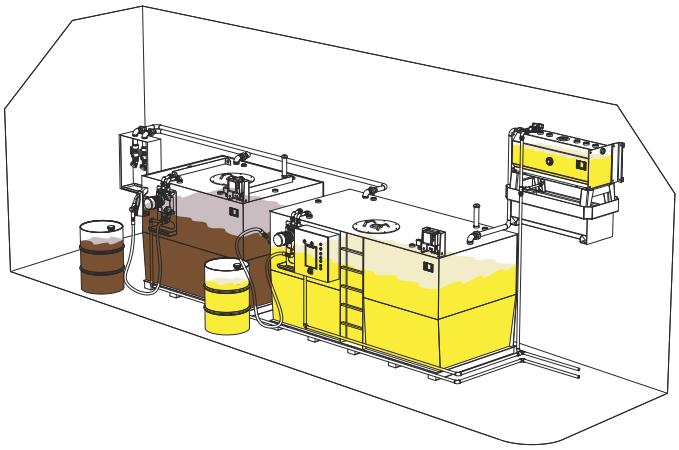

MAXIMAL - realized following functions:

- continuous oil supply to the engines from the reservoir which is filled automatically
- oil change, sucking of waste oil from the oil sump, filling the oil sump with fresh oil
- fuelling the fresh oil tank from barrel possible
- disposal waste oil from waste oil tank into barrel possible
- third-party fuelling the system with fresh oil through tank car
- third-party disposal waste oil from waste oil tank through tank car

Technical changes reserved!

Material	Commodity code	Documentation	Sheet
Grey cast iron	841 381 000	Operation Manual 1x English	6 of 6

Krampitz Maschinentank GmbH | Dannenberger Str. 15 | D-21368 Dahlenburg | Telephone: +49(0)3901/3088-100 | Telefax: +49(0)3901/3088-131